SHARP SERVICE MANUAL

CODE: 00ZER2595SM-E

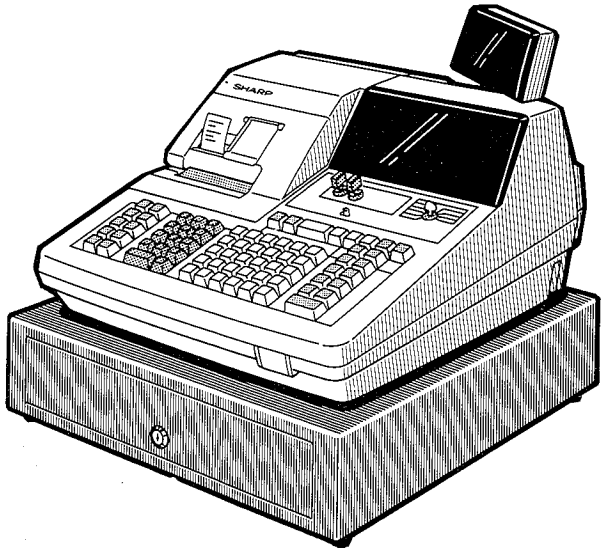

ELECTRONIC CASH REGISTER

MODEL ER-2595

PRINTER: UCR-910D
SRV key: LKGiM7113RCZZ

CONTENTS

SHARP CORPORATION

Power precautions

With this machine, the mode switch cannot be used to turn off the AC power.
To turn off the AC power, you need to unplug the power cord.
Make sure to remove the AC plug from the wall outlet before opening the cabinet.

1. BLOCK DIAGRAM

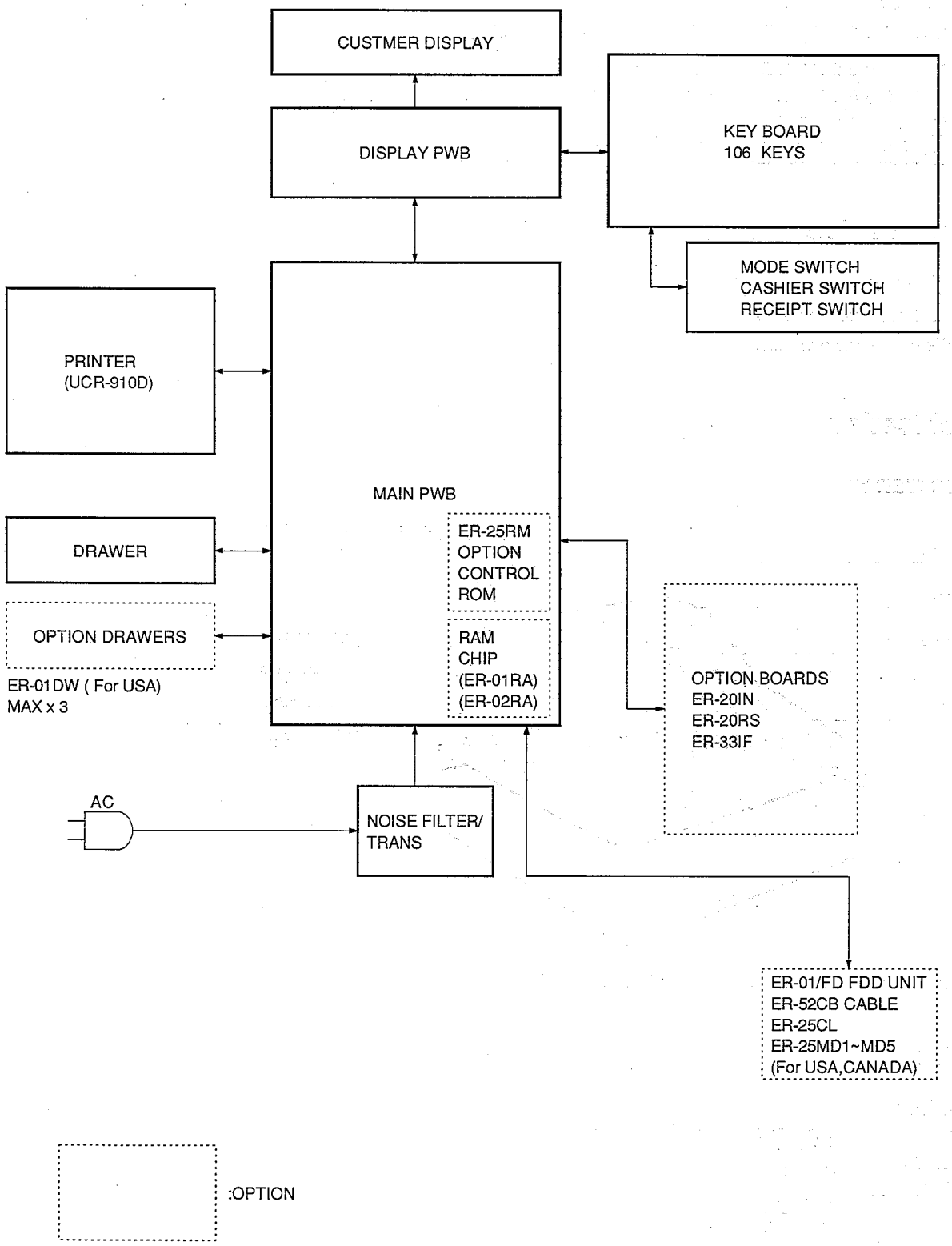

Fig. 1-1

2. Special Service Tools

No.	Parts code	Price	Description
1.	UKOG-0061CSZZ	BF	Main PWB – ER-20IN Expantion cable (30pins)
2.	QCNW-6952RCZZ	AY	Loader cable for SiO
3.	UKOG-6651RCZZ	AY	SiO loop back connector
4.	LKGiM7113RCZZ	AK	Service key
5.	UKOG-6634RCZZ	AX	Key top remover

3. Reference documents

(1) Cash register basic manual

(2) Printer UCR-910D service manual

(3) Printer CR-910D service manual.

4. Specification

4-1. Appearance

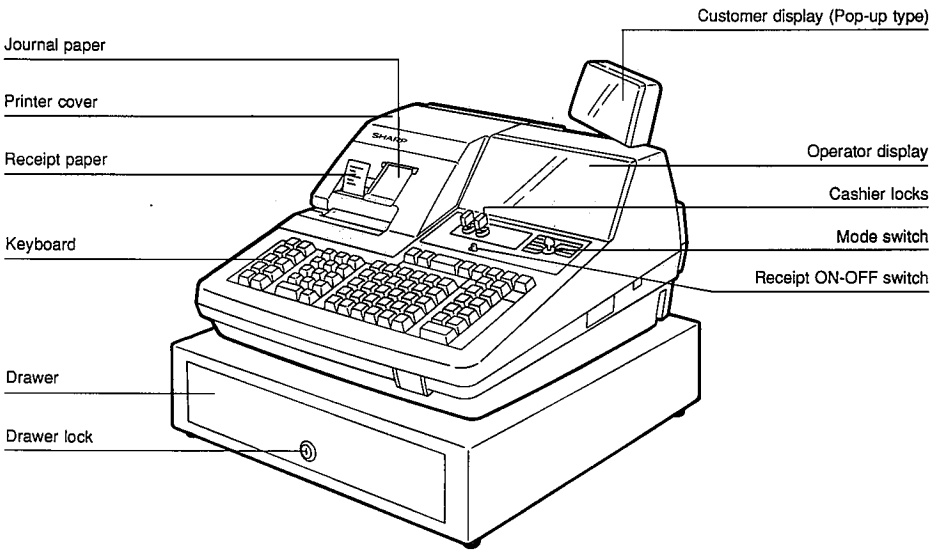

Note: The drawer specification may vary from destination to destination.

4-2. Rating

[Specifications]

Power source	AC LOCAL VOLTAGE (±10%), 60Hz
Power consumption	Standby 12W, Max. 40W
Ambient temperature, numidity	0 ~ 40°C 10 ~ 90°C
External dimensions (Including the drawer)	440(W) x 460(D) x 333(H) mm
Weight	17.5kg

4-3. Keyboard

(1) Standard key layout

									TAX1 SHIFT	TAX2 SHIFT	PLU/SUB	BR	%1	%2	⊖1	⊖2
														FS SHIFT	FS TEND	
	↑ RECEIPT	↑ JOURNAL		@/FOR	•	CL		5	10	15	20	25	30	TAX	CONV	
	PRINT	RCPT		7	8	9		4	9	14	19	24	29	CH2	CH3	
	NS	#		4	5	6		3	8	13	18	23	28	CHK	CH1	
	PO	RA		1	2	3		2	7	12	17	22	27	SBTL	MDSE SBTL	
	RFND	VOID		0		00		1	6	11	16	21	26	CA/AT		

Optional key top name

KEY TOP	DISCRIPTION
31 ~ 50 DEPT	Department keys
CH4, 5	Charge 4 & 5 keys (sum of MEDIA keys is max 10 keys)
CA2	Cash total 2 keys (sum of MEDIA keys is max 10 keys)
TAX3 SHIFT	Tax3 shift key
%3, %4	%3 & %4 keys
⊖3, ⊖4	Discount 3 & 4 keys
SCALE	Scale entry key
TRAY SBTL	Tray Subtotal key
GAS SBTL	Sub total included gas discount key
RFND SALE	Refund type of sales key

(2) Key top name (At standard feature)

[0] [00] ~ [9] : Numeric entry keys
[•] : Decimal point key
[CL] : Clear key
[@/FOR] : Multiplication key
[1] ~ [30] : Department keys
[↑ RECIEPT] [↑ JOURNAL] : Paper feed keys (Receipt & Journal)
[PRINT] : Validation print key
[RCPT] : Receipt print key
[NS] : No sale key
[#] : Non-add code key
[PO] : Paid out key
[RA] : Received on account key
[RFND] : Refund key
[VOID] : Void key
[PLU/SUB] : PLU/SUB dept. code entry key
[BR] : Bottle return key
[%1] , [%2] : Percent 1 & 2 keys
[⊖1] , [⊖2] : Discount 1 & 2 keys
[TAX1 SHIFT] [TAX2 SHIFT] : Tax1, Tax2 shift key
[FS SHIFT] : Food stamp shift key
[FS TEND] : Food stamp tender key
[TAX] : Manual TAX key
[CONV] : Currency conversion key
[CH1] [CH2] [CH3] : Charge 1 ~ 3 keys
[CHK] : Check key
[MDSE SBTL] : Merchan dise subtotal key
[SBTL] : Subtotal key
[CA/AT] : Cash amount tender key

4-4. Mode switch

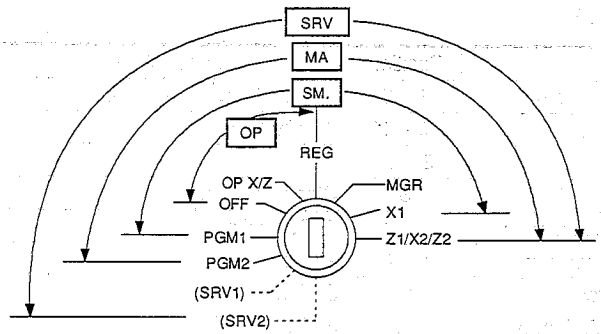

Note: 1. The key can be removed in the REG or OFF position.
2. Service mode is not prompted on the display.

[Mode switch positions]

SRV2 : Service mode (To reset the timer, key, and display controllers, and the system)

SRV1 : Service mode (Service programming)

PGM_2 : Program-2 mode (To set items that do not need frequent changes, in addition to various settings in PGM1) Individual cashier/clerk

PGM_1 : Program-1 mode (To set departments, PLU unit prices, percent rates, etc.)

OP X/Z : Clerk sales reading and resetting mode

OFF : Power off mode (AC power remains on.)

REG : Registration mode

MGR : Manager mode (To make corrections after the transaction, and to release input limits, etc.)

X1 : Reading of daily sales

Z1/X2/Z2 : Resetting of daily sales and reading and resetting of any periodic sales totals.

Mode select keys

SRV : Service key: LKGiM7113RCZZ

MA : Manager key: LKGiM7110RCZZ

SM : Sub-manager key: LKGiM7129RCZZ

OP : Operator key: LKGiM7111RCZZ

NOTE: SRV key is not included in the accessories. (Supplied as service parts)

4-5. Display

1) Front display (operator display)

- Display device
  - 11 digits
  - 7 segment type. (Green color)
  - Letter size: 13.0mm(H) x 6.0mm(W)
- Layout

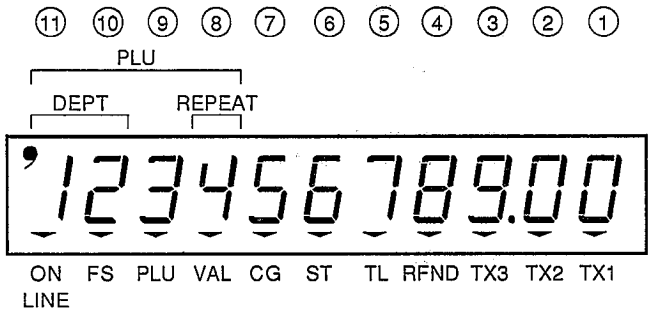

	Position	Description
Numerals	1 ~ 8	Pattern "123456789"
Dept	10 ~ 11	2 digits (1 to 50)
PLU	8 ~ 11	
Repeat	8	Starting from 2
Decimal point	1 ~ 4	TAB, Decimal point
Minus sign	2 ~ 8	–: floating
Error	11	E: Error
PGM Mode	11	P: PGM mode
Void	11	u Void mode

The following legends are indiated by small triangular lamp in the operator display

Lamp position	Symbol	Description
1	TX1	Comes on when [TAX1 SHIFT] key is pressed or a taxable 1 item is entered.
2	TX2	Comes on when [TAX2 SHIFT] key is pressed or a taxable 2 item is entered.
3	TX3	Comes on when [TAX3 SHIFT] key is pressed or a taxable 3 item is entered.
4	RFND	Comes on when [RFND] key is pressed or Refund type of sales is registered.
5	TL	Comes on when transaction is finished.
6	ST	Comes on when each subtotal is displayed.
7	CG	Comes on when change amount is displayed after tendering.
8	VAL	Comes on when validation printing is compulsory.
9	PLU	Comes on when PLU entry is made.
10	FS	Comes on when any item payable with food stamps is entered.
11	ON LINE	Comes on when RS-232C comunication is excuted.

2) Rear display (Customer display [Pop-up type])

The same device is used for the customer display as the operator display.

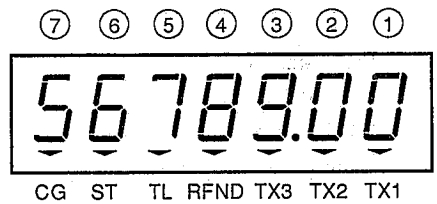

4-6. PRINTER: UCR-910D

[Specification]

1. Printer

Printer system	2-station, printing wheel selection printer Model: UCR-910D
Printing capacity	Receipt/journal print : 12 characters Validation print : 24 characters (one line only)
Character position	13 positions
Character size	Large-size character (on columns 1 and 2): 2.4(W) x 3.2(H)mm Standard character (on columns 3 to 12): 1.7(W) x 3.2(H)mm
Character spacing	• Column spacing Columns 1 and 2 : 3.7mm Columns 2 and 3 : 3.35mm Columns after 3 : 3.0mm • Line spacing : 5.1mm
Printing speed	Approx. 3 lines/sec
Paper feed	Independent journal/receipt feed Fast receipt feed: Approx. 18 lines/sec
Reliability	MCBF: 5 million lines

2. Paper

Paper roll size	Width: 44.5±0.5mm Maximum roll diameter: 83mm
Paper quality	Receipt/journal: High-quality paper Paper thickness: 0.06 ~ 0.09mm Validation print paper: Plain paper only Paper thickness: 0.09 ~ 0.19mm : Plain paper + copy paper Plain paper: 0.06mm max. Pressure set paper: 0.05 ~ 0.08mm Carbon copy paper: 0.035mm Thickness of base paper: 0.08 ~ 0.19mm Combined total thickness: 0.25mm max. Total number of sheets 3 sheets max. excluding carbon copy paper : Paper size: 115mm min.(W) x 80mm min.(H)

3. Inking

Ink supply system	Ink roll
Refilling of ink	Not possible
Dimensions	ϕ22 x 90mm
Life	600,000 lines
Print color	Purple (monocolor)

4. Stamp

System	Porous rubber
Stamp color	Purple (monocolor)
Refilling of ink	Possible
Maximum stamp size	30(W) x 20(H)mm
Stamp pattern	"YOUR RECIPT THANK YOU"

5. Wheel patten

Print wheel part code: 00BM711002210

	12	11	10	9	8	7	6	5	4	3	2	1
0	#	PL	GT	NS	No	•	•	•	•	DC	CA	VD
1	—	—	—	—	—	—	—	—	—	X	CK	TD
2	$	$	$	$	$	$	$	$	$	Z	CH	CG
3												
4	A	0	0	0	0	0	0	0	0	0	FS	FS
5	B	1	1	1	1	1	1	1	1	1	%	1
6	D	2	2	2	2	2	2	2	2	2	⊖	2
7	E	3	3	3	3	3	3	3	3	3	@	3
8	H	4	4	4	4	4	4	4	4	4	Q	4
9	P	5	5	5	5	5	5	5	5	5	KG	5
10	TX	6	6	6	6	6	6	6	6	6	LB	ST
11	T_X^1	7	7	7	7	7	7	7	7	7	TX	TL
12	T_X^2	8	8	8	8	8	8	8	8	8	RF	RA
13	T_2^1	9	9	9	9	9	9	9	9	9	CP	PO

NOTE: Printer wheel will be changed from 90' aug production.

① Contents

"H" mark → "@" mark (At 12 digits): For USA and CANADA
"$" mark → "★" mark: except USA and CANADA

② Parts code also will be change as follow.

00BM71100210 → 00BM711002240

6. Validation printable area

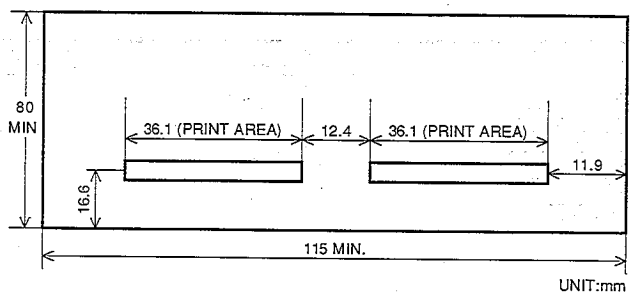

4-7. DRAWER

1. Drawer

- Standard equipment: One unit
- Maximum number of units: 4 units (including option drawers)

[Specification]

(1) Drawer boxes and drawers

Model name		SP460
Size	Width	440
	Depth	460
	Height*	117
Color		Light olive gray
Parts number of key		No. B01
Bell		Standard
Release lever		Standard (bottom)
Drawer open sensor		Option
Key operation	Lock	180-degree counterclockwise rotation
	Unlock	180-degree clockwise rotation

- SP460: Includes height of rubber footing 13mm.

(2) Cash box

	U.S.A	CANADA
Detaching from drawer	Detachable	Detachable
Detachability of bill/coin compartments	Not detachable	Not detachable
Number of compartments	6B/6C	6B/5C

- Pattern diagram

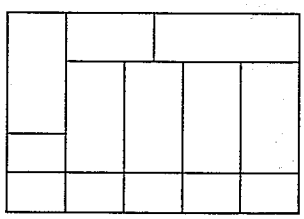

6B/6C
(U.S.A)
ER-33CC

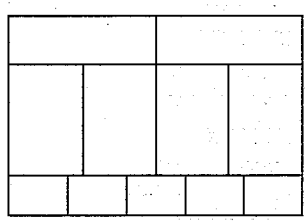

6B/5C
(CANADA)

4-8. Memory structure

ITEM	TOTALIZER	COUNTER	PRESET	NOTE
GT	13d x 3S			
Z COUNTER		4d x 2		
DEPARTMENT (DEPT. OIL COUNTER)	9d x 32S (52)	7d x 32S (52) 9d x 32S (52)	6d x 32 (52) 1d x 32 (52) 1d x 32 (52) 1d x 32 (52) 1d x 32 (52) 2d x 32 (52) 1d x 32 (52) 1d x 32 (52) 3d x 32 (52) 2d x 32 (52) 1d x 32 (52)	UNIT PRICE VP COMPULSORY SCALE ENTRY SIS BR/HASH GALLON AMOUNT ENTRY TYPE SIGN (+/–) FS SORT TAX SORT HALO GROUP (1 - 6)
DEPT. TTL	9d x 13S			1 - 6 (+) DEPT TTL (–) DEPT TTL (+) GALLON TTL (–) GALLON TTL (+) HASH TTL (–) HASH TTL (+) BR TTL (–) BR TTL
PLU	9d x 200S (*)	7d x 200S (*)	6d x 200 (*) 2d x 200 (*) 1d x 200 (*) 2d x 200 (*) 1d x 200 (*) 1d x 200 (*) 1d x 200 (*) 3d x 200 (*) 4d x 3 x 30	UNIT PRICE BASE Q'TY PLU/SUB-DEPT. ASSOCIATED DEPT. CODE SCALE SIGN FS SORT TAX SORT LINK PLU
NET	9d x 2			
⊖	9d x 4S	5d x 4S	6d x 4 1d x 4 1d x 4 3d x 4 2d x 4 1d x 4	UNIT PRICE SIGN FS SORT TAX SORT HALO ITEM/ST
%	9d x 4S	5d x 4S	5d x 4 1d x 4 1d x 4 3d x 4 1d x 4 5d x 4	RATE SIGN FS SORT TAX SORT STORE/VENDER HALO
GAS DISCOUNT	9d x 2S	5d x 2S		FOR CASH1, CASH2
NET TAXABLE SUBTOTAL	9d x 3S			
GROSS TAX	9d x 3S			
REFUND TAX	9d x 3S			
NET TAX	9d x 3S			
MANUAL TAX	9d x 2S		2d x 1	HALO
FS FORGIVENESS	9d x 3			
COUPON LIKE PLU	9d x 1S	5d x 1S		
VOID	9d x 1S	5d x 1S		
VOID MODE ITEM	9d x 1S	5d x 1S		
VOID MODE TRANSACTION	9d x 1S	5d x 1S		
SUBTOTAL VOID	9d x 1S	5d x 1S		
REFUND	9d x 1S	5d x 1S		
HASH VOID	9d x 1S	5d x 1S		
HASH REFUND	9d x 1S	5d x 1S		

*: About Max. 7000 with ER-02RA (stand alone machine)

ITEM	TOTALIZER	COUNTER	PRESET	NOTE
NO SALE		5d x 1S		
DRAWER OPEN		5d x 1S	3d x 1	TILL TIMER
VALIDATION		5d x 1S		
CUSTOMER		5d x 1S		
SALES TOTAL	9d x 1S			
MEDIA TTL	9d x 12S	4d x 12S	1d x 2 1d x 12 1d x 12 1d x 12 1d x 12 1d x 12 1d x 12 2d x 12 3d x 2	GAS AUTO DISCOUNT/NOT NON ADD CODE COMPULSORY OVER TENDERING/NOT VP COMPULSORY/NOT TAX DELETE/NOT DRAWER OPEN/NOT TENDERING COMPULSORY HALO GAS DISCOUNT RATE
FS SALE	9d x 1S	5d x 1S		
P/O	9d x 1S	5d x 1S	2d x 1	HALO
R/A	9d x 1S	5d x 1S	2d x 1	HALO
CASH/CHECKING	9d x 1S		2d x 1	CASH/CHECKING HALO
CHECK CHANGE	9d x 1S		9d x 1	HALO
FS CHANGE	9d x 1S			
FOREIGN CURRENCY	9d x 1S		8d x 1	RATE
FS IN DRAWER	9d x 1S			
CHECK IN DRAWER	9d x 1S			
CASH IN DRAWER	9d x 1S		9d x 1	SENTINEL
CASHIER			1d x 6	DRAWER NO.
CUSTOMER		5d x 1 x 6		
SALES TTL	9d x 1 x 6			
P/O	9d x 1 x 6	5d x 1 x 6		
R/A	9d x 1 x 6	5d x 1 x 6		
GAS DISCOUNT	9d x 2 x 6	5d x 2 x 6		
REFUND	9d x 2 x 6	5d x 1 x 6		
VOID	9d x 1 x 6	5d x 1 x 6		
⊖	9d x 4 x 6	5d x 4 x 6		
%	9d x 4 x 6	5d x 4 x 6		
DRAWER		5d x 1 x 6		
FOREIGN CURRENCY	9d x 4 x 6			
FS ID	9d x 4 x 6			
MEDIA TTL	9d x 12 x 6	5d x 12 x 6		
CHECK ID	9d x 1 x 6			
CASH ID	9d x 1 x 6			
HOURLY TTL				
CUSTOMER		5d x 1 x 48		
SALES TTL	9d x 1 x 48			
PERIODIC TOTAL				
DAILY NET				
CUSTOMER		5d x 1 x 31		
NET	9d x 1 x 31			
DATE		4d x 1 x 31		
CONSECTIVE			4d x 1	
MACHINE NO.			3d x 1	
DATE			6d x 1	
TIME			4d x 1	
STACKED REPORT			10 REPORT	
TAX TABLE			72 bp x 3	
SCALE TABLE			4d x 9	TARE WEIGHT
OPTIONAL FEATURE			6d x 3	
SECRET CODE			4d x 4	

GT Calculation Equations

There is the following relationship between the GTs and the values of respective totalizers printed on reports.

GT1 = GT2 – GT3

GT2 = Previous GT2 (value printed on the preceding Z report)

+ Plus ordinary department sales total
+ Plus gasoline department sales total
+ Plus bottle return department total
+ Gross tax 1 total
+ Gross tax 2 total
+ Plus manual tax total
+ REG-mode void total
+ VOID-mode void total
+ Refund total
+ Store coupon type PLU
+ Percent 1-4 total *1
+ Percent 1-4 total *3
+ Coupon/markdown 1-4 total *5
+ Coupon/markdown 1-4 total *7

GT3 = Previous GT3 (value printed on the preceding Z report)

+ Minus ordinary department sales total
+ Minus gasoline department sales total
+ Minus bottle return department total
+ Refund tax 1 total
+ Refund tax 2 total
+ Minus manual tax total
+ REG-mode void total
+ VOID-mode void total
+ Refund Total
+ Store coupon type PLU
+ Percent 1-4 total *2
+ Percent 1-4 total *4
+ Coupon/markdown 1-4 total *6
+ Coupon/markdown 1-4 total *8

Notes:

*1. This total is printed only when the percent is of subtotal percent type and has been programmed for premium.

*2. This total is printed only when the percent is of item percent type and has been programmed for discount.

*3. This total is printed only when tye percent is of item percent type and has been programmed for premium.

*4. This total is printed only when the percent is of item percent type and has been programmed for premium.

*5. This total is printed only when the coupon is of vender coupon type and has been programmed for premium.

*6. This total is printed only when the coupon is of vender coupon type and has been programmed for discount.

*7. This total is printed only when the coupon is of store coupon type and has been programmed for premium.

*8. This total is printed only when the coupon is of store coupon type and has been programmed for discount.

5. Options

5-1. ER-2595 system configuration

(NOTE 1) This symbol shows NEW MODEL.

ER xxxx

(NOTE 2) Formally a model name adds the "–" symbol after "ER" spelling. (ex. ER20RS is ER-20RS)

(NOTE 3) The ER25RM is necessary to work the option showed by "*" symbol. The ER25RM is only one ROM on some options.

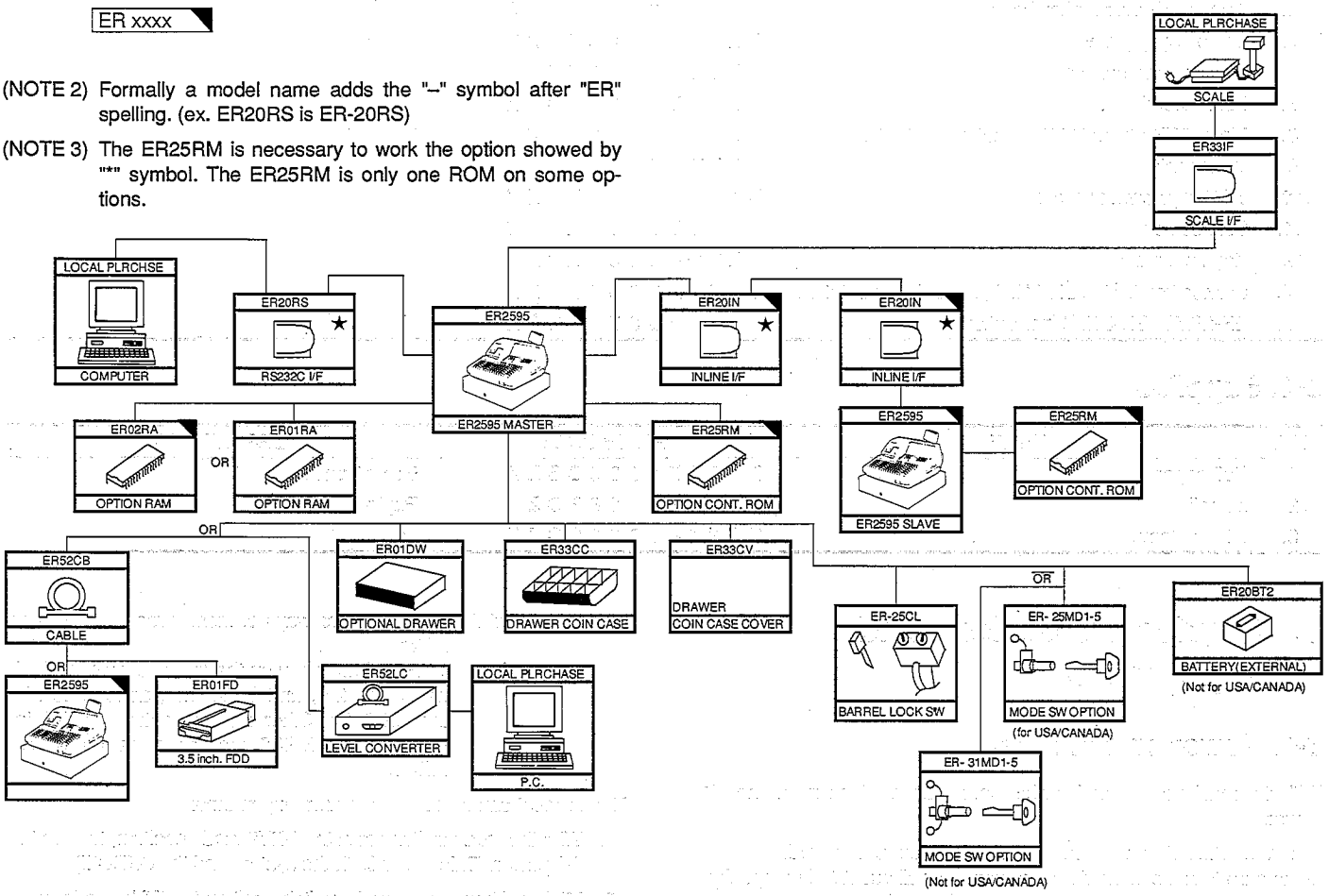

5-2. Options

NO.	NAME	MODEL	DESCRIPTION
1.	RS232C interface	ER-20RS	Requires control ROM ER-25RM
2.	SIMPLE IRC	ER-20IN	Requires control ROM ER-25RM
3.	Control ROM	ER-25RM	512KB (64K x 8B) control ROM
4.	Option RAM chip	ER-01RA	256KB (32K x 8B) RAM chip
		ER-02RA	1MB (128K x 8B) RAM chip
5.	Loader cable	ER-52CB	SIO interface cable
6.	Loader level converter	ER-52LC	SIO level converter (TTL ↔ RS232C)
7.	Loader option	ER-01FD	3.5" FDD
8.	Mode key Varidation	ER-25MD1 ~ 5	100 key variations For USA and CANADA
		ER-31MD1 ~ 5	100 key variations Not for USA and CANADA
9.	Remote drawer	ER-01DW	Max. 3 units For USA
10.	Coin cace (till)	ER-33CC	For USA
		ER-33CC1	For CANADA
11.	Coin cace cover	ER-33CV	For USA
		ER-33CV1	For CANADA
12.	Option battery	ER-20BT2	Not for USA AND CANADA
13.	Key top kit	ER-11KT6	1 x 1 key top
		ER-12KT6	1 x 2 key top
		ER-22KT6	2 x 2 key top
		ER-11DK6	1 x 1 Dummy key
		ER-51DK6	1 x 5 Dummy key
14.	Barrel lock SW	ER-25CL	
15.	SCALE I/F	ER-33IF	

5-3. Service option

NO.	NAME	PARTS CODE	DESCRIPTION
1.	Journal paper near-end sensor	DKiT-3370RCZZ	
2.	Varidation sensor	DKiT-3368RCZZ	
3.	Drip proof cover for printer	DKiT-3366RCZZ	
4.	Drip proof cover for key board	GCOVB6960RCZZ	
5.	Mode-key grip cover	LKGiM7126RCZZ	OP-key
6.	Drawer open sencer	DKiT-3376RCZZ	
7.	PLATE for magnet	LPLTM6654RCZZ	
8.	Main PWB-option PWB conector (ER-20IN)	UKOG-0061CSZZ	30pin conector
9.	S·I·O cable	QCNW-6952RCZZ	
10.	S·I·O loop back conector	UKOG-6651RCZZ	
11.	Service key	LKGiM7113RCZZ	
12.	Keytop remover	UKOG-6634RCZZ	
14.	Service key for the ER-25MD, ER-31MD varidation	LKGiM7094RCZZ	
15.	ER-25MD, ER-31MD installation kit	DKiT-3377RCZZ	

5-4. Supplies

NO.	NAME	PARTS CODE	DESCRIPTION
1.	Roll paper	DPAPR1006CSZZ	5 rolls/1pack
2.	Ink roll	NROLR6638RCZZ	Puple
3.	Ink for stamp	UiNK-1001CCZZ	5cc

6. Service precautions and adjustments

6-1. Power precautions

With this machine, the mode switch cannot be used to turn off the AC power.

To turn off the AC power, you need to unplug the power cord.
Make sure to remove the AC plug from the wall outlet before opening the cabinet.

6-2. Precautions in handling the machine

- **The heat sink on the main PWB is connected to the collector of TR12 (D1769) to which unregulated voltage is on. Take care not to short with other signal lines (keyboard frame, PWB, etc.). If shorted, it may result in parts damage.**
  When reassembling the machine, make sure that the keyboard is securely installed in the lower cabinet.

6-3. SRV2 mode and precautions in maintenance of CKDCIII

The ER-2595 uses a battery backed-up C-MOS microcomputer to control the clock, the keys, the display, the buzzer and the system reset.
The microprocessor CKDCIII is hardware reset with the key in the SRV2 mode position.

Normally, the machine is started by starting the CKDCIII with the I/O initialized.

(Master reset start) There are two ways of master reset; MRS1 and MRS2.
MRS2 allows entry on the numeric keys, @/FOR key, SBTL key, and CA/AT key, as is done with the ER-3100. Other memory setup and I/O initialization by MRS2 are the same as is with MRS1.

Master reset can be done in the following manner.

1. With the mode switch set in the SRV2 mode position, turn on the AC power. (This resets both the system and the CKDCIII).
2. MRS1: Change the mode switch position to SRV1 mode while holding down the "Journal feed" key. (This starts the CKDCIII)

   MRS2: Change the mode switch position to SRV1 mode while holding down both the "Journal feed" and "Receipt feed" keys. (This starts the CKDCIII)

NOTE: When the CKDCIII is operating properly, the memory and I/O can be initialized by turning on the AC power in the SRV1 mode with the "Journal feed" key or both the "Journal feed" and "Receipt feed" keys depressed. However, master reset needs to be done in the SRV2 mode.

In the SRV2 mode, the CKDCIII is in a reset state, and as a result, the reset is applied to the entire system.
If the mode switch is changed to the SRV2 position with the machine in a normal operating condition, the entire system will be forced to reset without the normal power down processing. This may result in the destruction of data stored in the memory.
If the above operation was performed for any reason, restart the system by master reset after the repair work has been completed.
Also, if the cable between the display PWB unit and the main PWB unit is disconnected, or if the battery switch (J1) is turned off, the operation of the CKDCIII may become unpredictable. After the repair work has completed, restart the system using the master reset by resetting the CKDCIII in the SRV2 mode.
In the SRV2 mode, since the CKDCIII is in a reset state, the clock may be stopped depending on the cases.

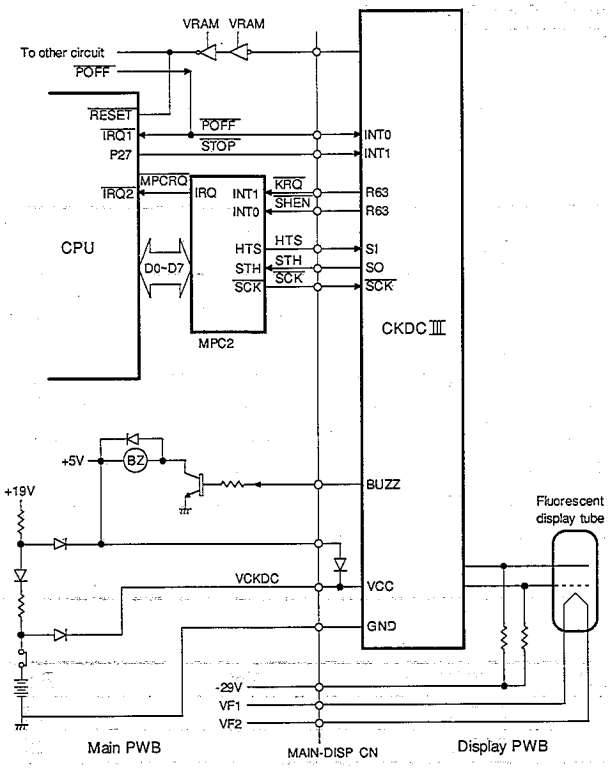

Fig. 6-1

6-5. Printer speed adjustment

The printer (UCR-910D) speed can be adjusted by adjusting the printer motor power supply (+19V) with the following procedure.

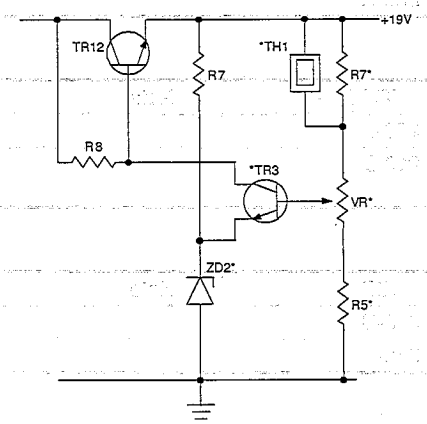

* Speed adjustment is necessary when any of the parts marked with asterisk (*) are replaced or when the potentiometer (VR) has been moved.

To adjust the printer speed, proceed as follows:

1) Connect the oscilloscope probe to the $\overline{JF}$ pin. (Connect the GND of the oscilloscope to the GND pin)

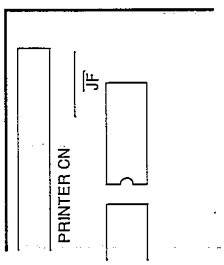

2) Set the mode switch to the SRV mode, and execute the diagnostic JOB#3.

   3 → SBTL

3) Adjust the speed while observing the $\overline{JF}$ waveform on the oscilloscope.
   Clockwise rotation of the potentiometer increases the speed. (Increasing the speed is equivalent to reducing "t")

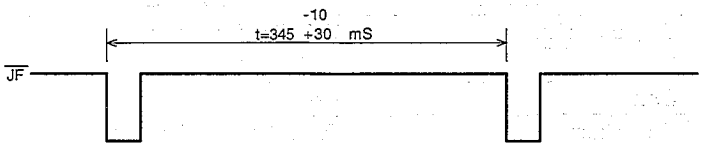

6-6. Hints in installing the validation paper sensor

- For installation, refer to the installation procedure discussed later in this manual.
- After any modification is done to the printer, cut the VDJ (validation jumper) on the main PWB.
  When the validation paper sensor is removed, connect the VDJ.

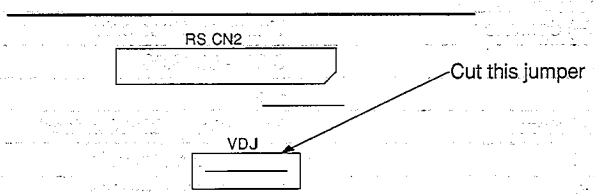

6-7. Clock accuracy

The clock accuracy is within one minute per month at a maximum under the condition of 25±5°C.
However, when the machine is not in use for a long period of time, the clock may develop a greater error. (When the machine is not in use for a long period of time, the backup battery is exhausted, resulting in a drop of terminal voltage causing a clock error. Under the worst conditions, the accuracy will be retained within two minutes per month. Should any error greater than that develop, it may be due to defective crystals (x2) or capacitors C4 and C5 on the display PWB.

7. SRV1/PGM mode program list and preset printouts

7-1. SRV1/PGM MODE PROGRAM LIST

******** % ********

Function	Scope/method	At MRS	JOB#	Note	Page
ST% operation	Unlimited/Once only	Unlimited	915-C		23
Rate	0.00 ~ 100.00	0.00	130		29
Sign	–/+	–	231-A		30
Food stamp	Food stampable/Non food	Non food	231-B		30
Tax3	Taxable/Non taxable	Non taxable	231-C		30
Tax2	Taxable/Non taxable	Non taxable	231-D		30
Tax1	Taxable/Non taxable	Non taxable	231-E		30
%1 ~ %4	ITEM%/SBTL%	SBTL%	235-A		31
%HALO	0.00 ~ 100.00	0.00	239		31
% Tax rate programming	Table1, 2, 3 % tax rate=0.00 00 ~ 99.9999	0.00	241		31

******** (–) ********

Function	Scope/method	At MRS	JOB#	Note	Page
Printing of (–) key	"–"/"CP"	"–"	915-B		23
ST(–) operation	Unlimited/Once only	Unlimited	915-C		23
Rate	0.00 ~ 9999.99	0.00	130		29
Sign	–/+	–	231-A		30
Food stamp	Food stampable/Non food	Non food	231-B		30
Tax3	Taxable/Non taxable	Non taxable	231-C		30
Tax2	Taxable/Non taxable	Non taxable	231-D		30
Tax1	Taxable/Non taxable	Non taxable	231-E		30
HALO			232		30
(–)1 ~ (–)4	STORE(–)/VENDER(–)	VENDER(–)	236-A		31

******** BR ********

Function	Scope/method	At MRS	JOB#	Note	Page
Bottole return	Disable/Enable	Disable	906-B		21
Selection of the group	Normal/hash/Gasoline/Bottle return	Normal	210-E		28

******** BUZZER ********

Function	Scope/method	At MRS	JOB#	Note	Page
Buzzer off 2 sec after lock error	2-second off/Continuous	2-second off	913-C		23
Key catch sound	Enable/Disable	Enable	913-D		23

******** CASH ********

Function	Scope/method	At MRS	JOB#	Note	Page
CASH, CHECKING	Enable/Disable	Disable	914-D		23
Automatic markdown for gasoline	Yes/No	No	260-A		29
Non add code entry	Non compulsory/Compulsory	Non compulsory	260-B		30
Change due	Enable/Disable	Enable	260-C		30
Validation print	Non compulsory/Compulsory	Non compulsory	260-D		30
Taxable3 delete	Yes/No	No	260-E		30
Taxable2 delete	Yes/No	No	260-F		30
Taxable1 delete	Yes/No	No	260-G		30
Drawer open	Yes/No	Yes	260-H		30
Entry of amount tendered	Non compulsory/Compulsory	Non compulsory	260-I		30
HALO			262		30
Gallon discount amount	0 ~ 99.9	0.0	271		33

******** CASHIER ********

Function	Scope/method	At MRS	JOB#	Note	Page
Cashier code entry	Noncompulsory/Compulsory	Noncompulsory	910-B		22
Cashier key type	Stay down/Barrel-lock	Barrel-lock	910-D		22
Number of cashiers	4-cashiers/2-cashiers	2-cashiers	910-D		22
Cashier code	Disable/Enable	Disable	910-D		22
Cashier drawer assigment	Cashier NO.=A ~ E=0 ~ 4 Drawer NO.	1	259		31

******** CHARGE ********

Function	Scope/method	At MRS	JOB#	Note	Page
Automatic markdown for gasoline	Yes/No	No	260-A		29
Non add code entry	Non compulsory/Compulsory	Non compulsory	260-B		30
Change due	Enable/Disable	Enable	260-C		30
Validation print	Non compulsory/Compulsory	Non compulsory	260-D		30
Taxable3 delete	Yes/No	No	260-E		30
Taxable2 delete	Yes/No	No	260-F		30
Taxable1 delete	Yes/No	No	260-G		30
Drawer open	Yes/No	Yes	260-H		30
Entry of amount tendered	Inhibited/Compulsory	Inhibited	260-I		30
HALO			262		30
Gallon discount amount	0 ~ 99.9	0.0	271		33

******** CHECK ********

Function	Scope/method	At MRS	JOB#	Note	Page
CHECKING	Enable/Disable	Disable	914-D		23
print check change on general report	Enable/Disable	Enable	916-D		23
Automatic markdown for gasoline	Yes/No	No	260-A		29
Non add code entry	Non compulsory/Compulsory	Non compulsory	260-B		30
Change due	Enable/Disable	Enable	260-C		30
Validation print	Non compulsory/Compulsory	Non compulsory	260-D		30
Taxable3 delete	Yes/No	No	260-E		30
Taxable2 delete	Yes/No	No	260-F		30
Taxable1 delete	Yes/No	No	260-G		30
Drawer open	Yes/No	Yes	260-H		30
Entry of amount tendered	Non compulsory/Compulsory	Non compulsory	260-I		30
HALO			262		30
Gallon discount amount	0 ~ 99.9	0.0	271		33

******** COVERSION ********

Function	Scope/method	At MRS	JOB#	Note	Page
Rate	0.00 ~ 99999.999	0.00	130		29

******** DATE ********

Function	Scope/method	At MRS	JOB#	Note	Page
Date print format	M-D-Y/D-M-Y/Y-M-D	M-D-Y	912-A		22
Date setting	6 digit	010100	250		32

******** DEPT ********

Function	Scope/method	At MRS	JOB#	Note	Page
Hash departments	Disable/Enable	Disable	906-B		21
Split price Q'ty count	Q'ty/Package	Q'ty	906-C		21
Tare table number	No tare table/1 ~ 9	No tare table	210-B		28
SICS function	Normal/Single item cash sale	Normal	210-D		28

Function	Scope/method	At MRS	JOB#	Note	Page
Selection of the group	Normal/hash/Gasoline/Bottle return	Normal	210-E		28
Amount entry type	Inhibited/Open/Preset/Open and Preset	Open	210-F		28
DEPT. sign	–/+	+	211-A		28
Food stamp	Food stampable/Non food	Non food	211-B		28
Max digit figure	1 ~ 9	1	212-A		28
NO. of zeros following the max	0 ~ 7	7	212-B		28
Group number	0 ~ 52	0	216-A		28
DEPT. to be associated with PLU's	Delete/PLU/Sub-DEPT./Inhibit	PLU	121		29
Zero skip in department report	Yes/No	Yes	256-C-3		32

******** **DISPLAY** ********

Function	Scope/method	At MRS	JOB#	Note	Page
Tab selection	0/1/2/3	2	901-D		21
Fractional treatment gallonage Q'ty	Round off/Round up/Round down	Round off	904-A		21
Decimal point position gallonage Q'ty	0/1/2/3	0	904-B		21
Tabulation for gasoline	0.00/0.000	0.00	904-D		21
Fraction treatment	Round off/Round up/Round down	Round off	911-A		22
Time system	12H/24H	12H	912-B		22

******** **DRAWER** ********

Function	Scope/method	At MRS	JOB#	Note	Page
Drawer closing operation compulsory	Disable/Enable	Enable	913-D	Requires service option DKiT-3376RCZZ	23
Drawer open: CA1, CA2, CH1 ~ CH5, CHK	Yes/No	Yes	260-H		30
Cashier drawer assigment	Cashier NO.=A ~ E Drawer NO.=0 ~ 4	1	259		31

******** **ERROR** ********

Function	Scope/method	At MRS	JOB#	Note	Page
Buzzer off 2 sec after lock error	2-second off/Continuous	2-second off	913-C		23
Error mode	All lock error/Lock and one shot	All lock error	913-D		23

******** **FILE** ********

Function	Scope/method	At MRS	JOB#	Note	Page
Memory allocation programming			971		24

******** **FREE KEY LAYOUT** ********

Function	Scope/method	At MRS	JOB#	Note	Page
Free key layout (exciuding department keys)			950		26
Free key layout (department keys)			951		26

******** **FS** ********

Function	Scope/method	At MRS	JOB#	Note	Page
Food stamp	No FS/Tax payable by CASH/Tax payable in FS/FS tax forgivene	No FS	903-D		21
Food stamp subtotal entry before food stamp tendering	Noncompulsory/compulsory	Noncompulsory	916-C		23
Food stamp	Food stampable/Non food	Non food	211-B		28
PLU's foood stamp	Food stampable/Non foood	Non food	221-B		29

Function	Scope/method	At MRS	JOB#	Note	Page
Food stamp : %1 ~ %4, (–)1 ~ (–)4	Food stampable/Non food	Non food	231-B		30

******** GAS ********

Function	Scope/method	At MRS	JOB#	Note	Page
Fractional treatment gallonage Q'ty	Round off/Round up/Round down	Round off	904-A		21
Decimal point position gallonage Q'ty	0/1/2/3	0	904-B		21
Tabulation for gasoline	0.00/0.000	0.00	904-D		21
Gasoline function	Yes/No	No	904-D		21
Automatic markdown for gasoline : Function CA1, CA2, CH1 ~ CH5, CHK	Yes/No	No	260-A		29
Gallon discount amount : CA1, CA2, CH1 ~ CH5, CHK	0 ~ 99.9	0.0	271		33

******** NON ADD # ********

Function	Scope/method	At MRS	JOB#	Note	Page
No-sale after non add code entry	Disable/Enable	Disable	914-B		23
Non add code entry for each item	Noncompulsory/Compulsory	Noncompulsory	914-C		23
Non add code entry	Enable/Disable	Enable	914-D		23
Non add code entry : CA1, CA2, CH1 ~ CH5, CHK	Non compulsory/Compulsory	Non compulsory	260-B		

******** NS ********

Function	Scope/method	At MRS	JOB#	Note	Page
NS key separation from CA/AT key for no-sale function	Yes/No	Yes	914-A		23
No-sale after non add code entry	Disable/Enable	Disable	914-B		23

******** PLU ********

Function	Scope/method	At MRS	JOB#	Note	Page
Print minus PLU's on general report	Enable/Disable	Enable	916-D		23
Print amount on zero price PLU	Disable/Enable	Disable	919-C		24
Price programming for PLU's	Base Q'ty or Base weight=0 ~ 99, Amount=0 ~ 999999	0	120		28
DEPT. to be associated with PLU's	Delete/PLU/Sub-DEPT./Inhibit	PLU	121		29
tare table number	No tare function/1 ~ 9	No tare functio	220-A		29
PLU's sign	–/+		221-A		29
PLU's foood stamp	Food stampable/Non foood	Non food	221-B		29
PLU's tax3	Taxable/Non taxable	Non taxable	221-C		29
PLU's tax2	Taxable/Non taxable	Non taxable	221-D		29
PLU's tax1	Taxable/Non taxable	Non taxable	221-E		29
Linked PLU		0	225		29
Zero skip in PLU report	Yes/No	Yes	256-C-3		32

******** PO ********

Function	Scope/method	At MRS	JOB#	Note	Page
HALO : PO	232	18	232		30

******** PRINT ********

Function	Scope/method	At MRS	JOB#	Note	Page
Tab selection	0/1/2/3	2	901-D		21
Fractional treatment gallonage Q'ty	Round off/Round up/Round down	Round off	904-A		21

Function	Scope/method	At MRS	JOB#	Note	Page
Decimal point position gallonage Q'ty	0/1/2/3	0	904-B		29
Tabulation for gasoline	0.00/0.000	0.00	904-D		29
GT1 GT2, GT3 print on Z report	Print/Skip	Print	908-A		29
GT1 print on X report	Print/Skip	Skip	908-B		30
Printing X/Z report	Recipt & Journal/Journal	Recipt & Journal	908-D		30
Void mode totalizer on Z2 printing	Disable/Enable	Enable	909-C		30
Fraction treatment	Round off/Round up/Round down	Round off	911-A		30
Data print format	M-D-Y/D-M-Y/Y-M-D	M-D-Y	912-A		30
Time system	12H/24H	12H	912-B		30
After transaction receipt	Total only/Delail	Total only	912-C	Requires ER-01RA RAM	30
Copy receipt	Yes/No	No	912-C	Requires ER-01RA RAM	30
Tax printing	Disable/Enable	Disable	913-A		30
Subtotal printing when SBTL key is pressed	Disable/Enable	Disable	913-B		31
MDSE SBTL printing when MDSE SBTL key	Disable/Enable Disable		913-B		31
Recipt issuing at no-sale	Enable/Disable	Enable	914-A		31
Currency symbol	"$"/" "	"$"	915-A		31
Printing of (–) key	"–"/"CP"	"–"	915-B		31
Print minus PLU's, sales subtotal, check change on general report	Enable/Disable	Enable	916-D		31
Taxable 1 subtotal on X/Z report	Print/Skip	Print	917-A		32
Gross tax1 and refund tax total on X/Z report					
Net tax1 total on X/Z report					
taxable2 subtotal on X/Z report	Print/Skip	Print	917-B		32
Gross tax2 and refund tax2 total on X/Z report					
Net tax2 total on X/Z report					
Taxable3 subtotal on X/Z report	Print/Skip	Print	917-C		32
Gross tax3 and tax3 total on X/Z report					
Net tax3 total on X/Z report					
Total tax amount on X/Z report	Print/Skip	Print	917-D		32
Gross manual tax and refund munual tax on X/Z report					
Net manual tax total on X/Z report					
Print amount on zero price PLU	Disable/Enable	Disable	919-C		32
Print currency conversion SBTL	Disable/Enable	Enable	919-D		32
SRV mode program full item report			900		34
Key layout programming report			950		34
Key layout programming report			951		34
Printing of the number of purchases	Yes/No	No	256-A-2		40
Time print	Yes/No	Yes	256-B-2		40
Journal select	Full printing/Journal select	Full printing	256-D-2		40
Zero skip on cashier report	Yes/No	Yes	256-A-3		40
Zero skip in transaction report	Yes/No	Yes	256-B-3		40
Zero skip in PLU report	Yes/No	Yes	256-C-3		40
Zero skip in department report	Yes/No	Yes	256-C-3		40
Zero skip in hourly report	Yes/No	Yes	256-E-3		40
Zero skip in dailey net report	Yes/No	Yes	256-F-3		40
Staked reportumber	Start code, End code		286		41

Function	Scope/method	At MRS	JOB#	Note	Page
Department programming reading			110		41
PLU programming reading			120		41

******** RA ********

Function	Scope/method	At MRS	JOB#	Note	Page
RA type	With tendering/Direct	With tendering	915-C		31
HALO : RA			232		38

******** SBTL ********

Function	Scope/method	At MRS	JOB#	Note	Page
Subtotal printing when SBTL key is pressed	Disable/Enable	Disable	913-B		31
MDSE SBTL printing when MDSE SBTL key			913-B		31
Negative merchandise subtotal	Enable/Disable	Enable	916-C		34
Compulsory subtotal entry	Enable/Disable	Disable	916-C		34
Food stamp subtotal entry before food stamp tendering	Noncompulsory/compulsory	Noncompulsory	916-C		34
Print net sales subtotal on general report	Enable/Disable	Enable	916-D		34
Print currency conversion SBTL	Disable/Enable Enable		919-D		32

******** SCALE ********

Function	Scope/method	At MRS	JOB#	Note	Page
Scale	Inhibit/Enable/Compulsory	Inhibit	220-B		37
Scale selection	Manual/Auto	Manual	903-C		29
Entry of weight	Disable/Enable	Disable	903-C		29
Type weight	lb/kg	lb	903-C		29
Scale entry	Inhibited/Allowed	Inhibited	210-C		36
SCALE tare table	Tare tare table NO.=1 ~ 9 Weight=0.00 ~ 99.99	0.00	158		39

******** SECRET CODE ********

Function	Scope/method	At MRS	JOB#	Note	Page
PGM1 mode secret code	0 ~ 9999	Compulsory	280		41
PGM2 mode secret code	0 ~ 9999	Compulsory	946		30
Z1 mode secret code	0 ~ 9999	Compulsory	281		41
Z2 mode secret code	0 ~ 9999	Compulsory	282		41

******** TAX ********

Function	Scope/method	At MRS	JOB#	Note	Page
Tax printing	Disable/Enable	Disable	913-A		30
Tax delete	Disable/Enable	Disable	914-A		31
Manual tax	Enable/Disable	Enable	914-D		31
Taxable 1 subtotal on X/Z report	Print/Skip	Print	917-A		32
Gross tax1 and refund tax total on X/Z report					
Net tax1 total on X/Z report					
taxable2 subtotal on X/Z report	Print/Skip	Print	917-B		32
Gross tax2 and refund tax2 total on X/Z report					
Net tax2 total on X/Z report					
Taxable3 subtotal on X/Z report	Print/Skip	Print	917-C		32
Gross tax3 and tax3 total on X/Z report					
Net tax3 total on X/Z report					
Total tax amount on X/Z report	Print/Skip	Print	917-D		32

Function	Scope/method	At MRS	JOB#	Note	Page
Gross manual tax and refund munual tax on X/Z report	Print/Skip	Print	917-D		32
Net manual tax total on X/Z report					
Tax 3	Taxable/Non taxable	Non taxable	211-C		36
Tax 2	Taxable/Non taxable	Non taxable	211-D		36
Tax 1	Taxable/Non taxable	Non taxable	211-E		36
PLU's tax3	Taxable/Non taxable	Non taxable	221-C		37
PLU's tax2	Taxable/Non taxable	Non taxable	221-D		37
PLU's tax1	Taxable/Non taxable	Non taxable	221-E		37
Taxable3 delete : CA1, CA2, CH1 ~ CH5, CHK	Yes/No	No	260-E		38
Taxable2 delete : CA1, CA2, CH1 ~ CH5, CHK	Yes/No	No	260-F		38
Taxable1 delete : CA1, CA2, CH1 ~ CH5, CHK	Yes/No	No	260-G		38
Tax3 : %1 ~ %4, (–)1 ~ (–)4	Taxable/Non taxable	Non taxable	231-C		38
Tax2 : %1 ~ %4, (–)1 ~ (–)4	Taxable/Non taxable	Non taxable	231-D		38
Tax1 : %1 ~ %4, (–)1 ~ (–)4	Taxable/Non taxable	Non taxable	231-E		38
HALO : TAX			232		38
Tax table programming		No table	240		39
% Tax rate programming	Table1, 2, 3 % tax rate=0.00 00 ~ 99.9999	0.00	241		39

******** TILL TIMER ********

Function	Scope/method	At MRS	JOB#	Note	Page
Time interval for the till timer	0 ~ 255sec	0sec	270	Requires service option DKiT-3376RCZZ	41
Till timer	Yes/No	No	902-D		29

******** TIME ********

Function	Scope/method	At MRS	JOB#	Note	Page
Time format	12H/24H	12H	912-B		30
Time setting	0 ~ 2359	0000	251		40

******** VOID ********

Function	Scope/method	At MRS	JOB#	Note	Page
Void mode	Enable/Disable	Enable	907-D		30
Add void mode transaction data to hourly total	Disable/Enable	Disable	908-C		30
Void mode totalizer on Z2 printing	Disable/Enable	Enable	909-C		30
Direct void function in REG mode	Allowed/Inhibited	Allowed	256-D-1		30
Indirect void function in REG mode	Allowed/Inhibited	Allowed	256-E-1		30
Subtotal void in REG mode	Allowed/Inhibited	Allowed	256-F-1		30

******** VP ********

Function	Scope/method	At MRS	JOB#	Note	Page
Validation printing	1 line/2 lines	1 line	912-D		30
VP format	Data&amount/Machine# & amount	Data & amount	913-A		30
VP amount	Total amount/Tendered amount	Tenderd amount	913-A		30
Item validation printing	Noncompulsory/compulsory	Noncompulsory	210-A		36
Validation print : CA1, CA2, CH1 ~ CH5, CHK	Non compulsory/Compulsory	Non compulsory	260-D		38
Refund VP	Noncompulsory/Compulsory	Noncompulsory	256-G-1		40

Function	Scope/method	At MRS	JOB#	Note	Page
Validation printing NO.of times printing	Inhibited/Allowed	Inhibited	256-C-2		40
Item validation printing	Enable/Disable	Enable	256-E-2		40

******** **OTHERS** ********

Function	Scope/method	At MRS	JOB#	Note	Page
Simple inline selection	Yes/No	No	902-A		29
SIO loader dumper baud rate setting	9600/4800/2400/1200/600/300 bps	9600 bps	903-A		29
Multiplication method	Multiplication/Successive multiplication/Split pricing	Multiplication	906-C		29
Fractional Q'ty	2-digit decimal places/3-digit decimal places	3-digit decimal	906-D		29
GT resetting at Z1	Disable/Enable	Disable	908-D		30
Individual cashier sales total	Net amount/Tax included	Tax included	910-A		30
Key buffer clearing at the end of transaction	Enable/Disable	Enable	913-C		31
Sprit tender direct finalization	Disable/Enable	Enable	918-A		32
Z1 general counter presetting			930		34
Z1 cashier counter presetting			933		34
Z1 PLU counter presetting			934		34
Z1 houry counter presetting			935		34
Z2 general counter presetting			936		34
Daily net counter presetting			939		34
GT2 high-order 6 digits			942		34
GT2 low-order 7 digits			943		34
GT3 high-order 6 digits			944		34
GT3 low-order 7 digits			945		34
PGM2 secret code presetting			946		34
SIO data sending			996		34
SIO data receiving			998		34
HALO : Check change, Cash check			261		39
OP X/Z mode	Allowed/Inhibited	Allowed	256-A-1		40
Refund sales mode in REG mode	Allowed/Inhibited	Allowed	256-B-1		40
RFND key entry in REG mode	Allowed/Inhibited	Allowed	256-C-1		40
Sentinel amount	0 ~ 999999999	9999999.99	257		40
Machine number	0 ~ 999	000	252		41
Consecutive number	0 ~ 9999	0000	253		41

7-2. SRV1 mode, PGM mode preset printouts

1. Reading of SRV1 mode setting

1) Full item report on the SRV1-mode programming

Job #900

(Key operating sequence)

900 → @/FOR → CA/AT

```
YOUR RECEIPT
THANK YOU

01-08-00
#900
#901   0002
#902   0000
#903   0000
#930
     0000 Z 1
#936
     0000 Z 2
#933
     0000 Z 1
#934
     0000 Z 1
#935
     0000 Z 1
#939
     0000 Z 2

#942
  GT2
  $0000000
   0000.00
#944
  GT3
  $0000000
   0000.00

#946   0000

#931
A    0000 Z 1
#937
A    0000 Z 2

A    4-17
B000№0001
```

- 01-08-00 — Date
- #900 — Job #
- #901 0002, #902 0000, #903 0000 — Job #, ABCD parameters
- #930 0000 Z 1 — Z1 counter
- #936 0000 Z 2 — Z2 counter
- #942 GT2 — GT2 counter
- #944 GT3 — GT3 counter
- #946 0000 — Secret code
- #931 A 0000 Z 1 — Consolidation Z1 counter
- #937 A 0000 Z 2 — Consolidation Z2 counter
- Consolidation Z1 counter / Consolidation Z2 counter — IN-line system Z1/Z2 reset counter
- A 4-17 — Time
- B000№0001 — Cashier / Machine No./consecutive No.

2) Key layout programming report

Job #951

(Key operating sequence)

951 → @/FOR → CA/AT

```
YOUR RECEIPT
THANK YOU

01-08-00

#951

01     039
02     040
03     041
04     042
49     --
50     --
51     --
52     --

A    4-17
000№0003
```

- 01 039, 02 040, 03 041, 04 042, 49 --, 50 --, 51 --, 52 -- — DEPT. key No. / key position No.

3) Key layout programming report

Job #950

(Key operating sequence)

950 → @/FOR → CA/AT

```
YOUR RECEIPT
THANK YOU

01-08-00

#950

01      024
02      020
03      025
04      030
05      021
06      026
07      031
08      022
09      027
10      032
11      029

47      098
48      097
49      011
50      007
51      008
52      009
53      013

A    4-18
000№0004
```

Key No./key position No.

4) ROM version reading (PGM2 mode)

Job #959

(Key operating sequence)

959 → @/FOR → CA/AT

```
YOUR RECEIPT
THANK YOU

01-08-00

#959

1  1.01
2  1.01

A    4-19
000№0005
```

2. Reading of PGM-mode programming

1) Reading of programmed items for departments: Job #110
(Reading in the PGM1 and PGM2 modes)

Reading procedure

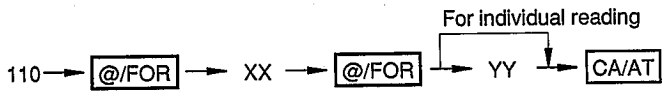

XX: Reading start dept. code
YY: Reading end dept. code

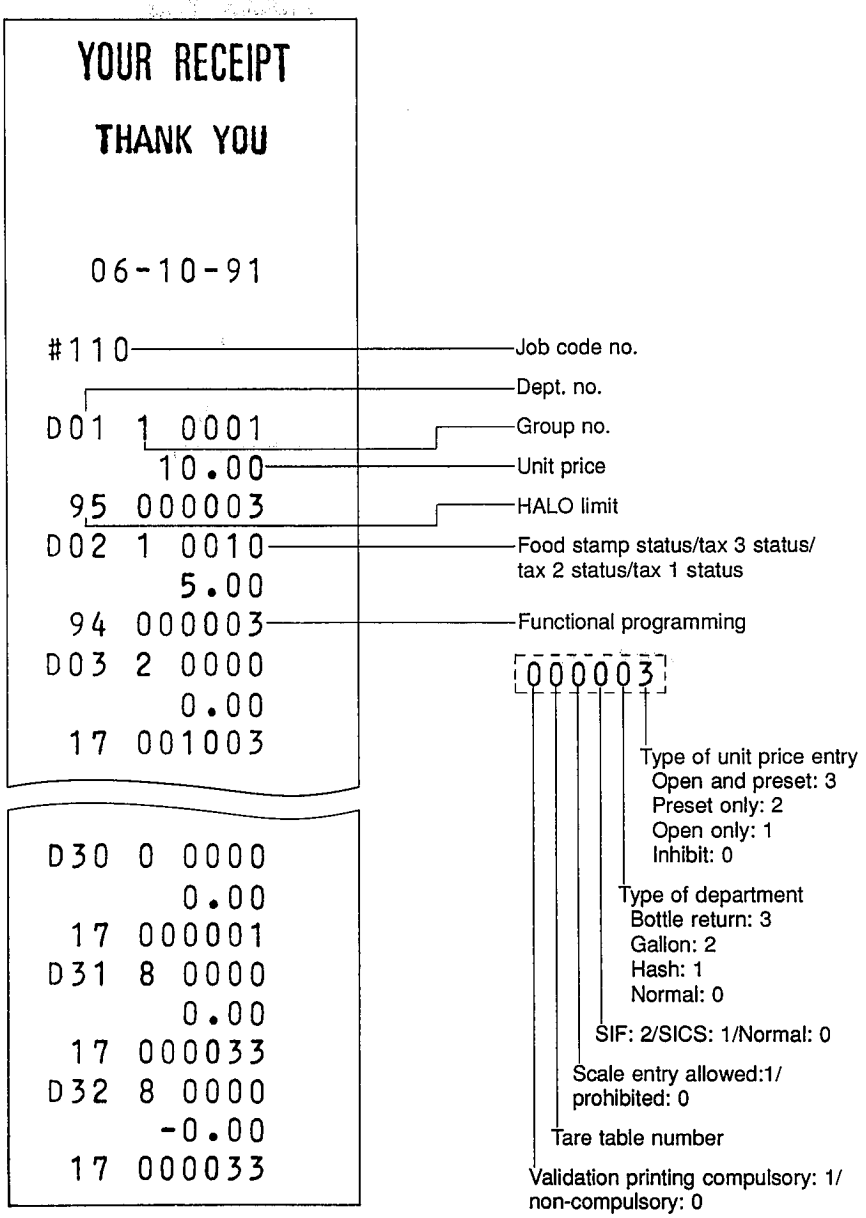

2) Reading of programmed items for PLUs/subdepartments:
Job #120
(Reading in the PGM1 and PGM2 modes)

Reading procedure

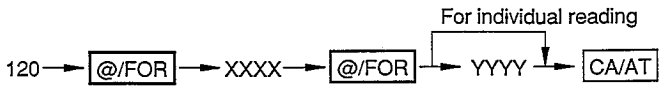

XXXX: Reading start PLU code
YYYY: Reading end PLU code

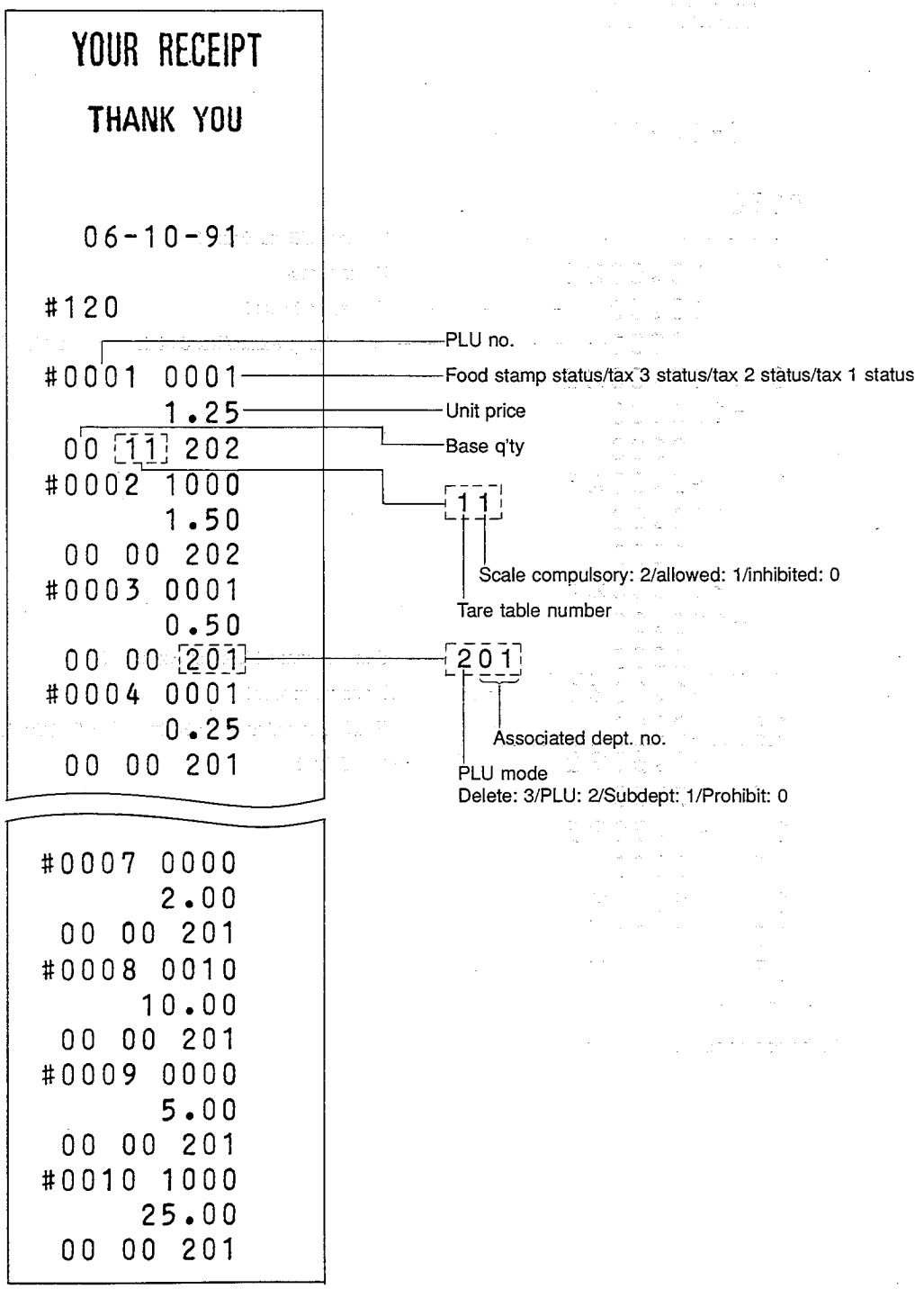

3) Reading of programmed items for functions — (1): Job #130
(Reading in the PGM1 and PGM2 modes)

Reading procedure

130 → [@/FOR] → [CA/AT]

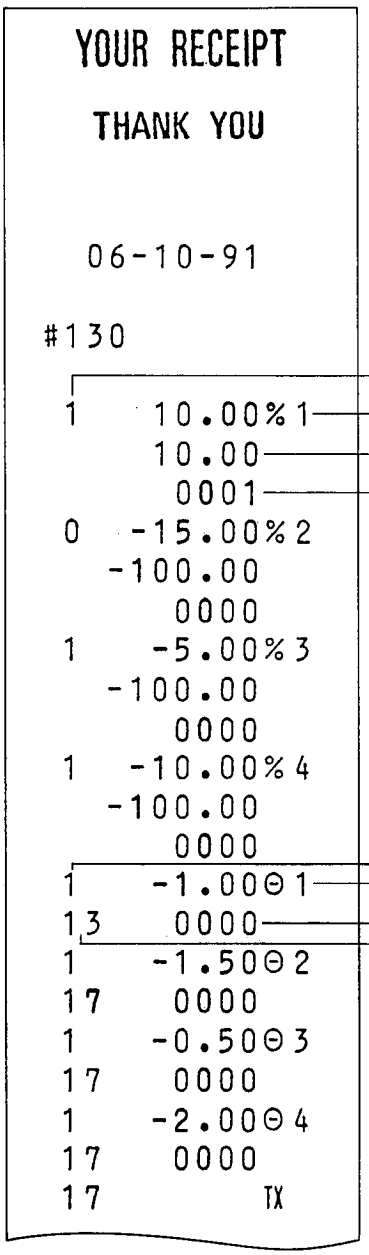

% item: 1/% subtotal: 0
Percent rate
Percent rate limit
Food stamp status/Tax 3 status/Tax 2 status/Tax 1 status
Store coupon: 1/Vendor coupon: 0
Discount amount
Food stamp status/Tax 3 status/Tax 2 status/Tax 1 status
HALO limit

To be continued on the next page.

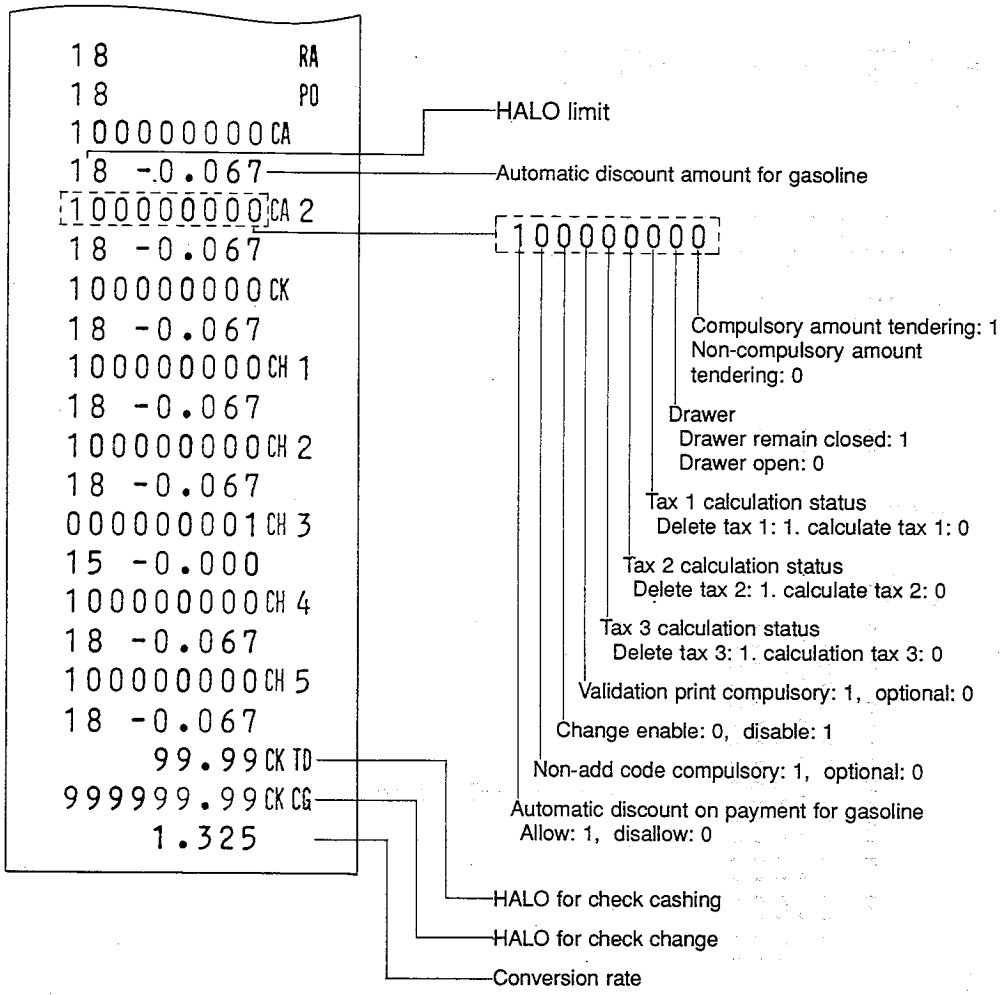
18 RA
18 PO
100000000CA
18 -0.067
100000000CA 2
18 -0.067
100000000CK
18 -0.067
100000000CH 1
18 -0.067
100000000CH 2
18 -0.067
000000001CH 3
15 -0.000
100000000CH 4
18 -0.067
100000000CH 5
18 -0.067
99.99CK TD
999999.99CK CG
1.325
HALO limit
Automatic discount amount for gasoline
100000000
Compulsory amount tendering: 1
Non-compulsory amount tendering: 0
Drawer
Drawer remain closed: 1
Drawer open: 0
Tax 1 calculation status
Delete tax 1: 1. calculate tax 1: 0
Tax 2 calculation status
Delete tax 2: 1. calculate tax 2: 0
Tax 3 calculation status
Delete tax 3: 1. calculation tax 3: 0
Validation print compulsory: 1, optional: 0
Change enable: 0, disable: 1
Non-add code compulsory: 1, optional: 0
Automatic discount on payment for gasoline
Allow: 1, disallow: 0
HALO for check cashing
HALO for check change
Conversion rate

4) Reading of programmed items for functions — (2): Job #131
(Reading in the PGM1 and PGM2 modes)

Reading procedure

131 → @/FOR → CA/AT

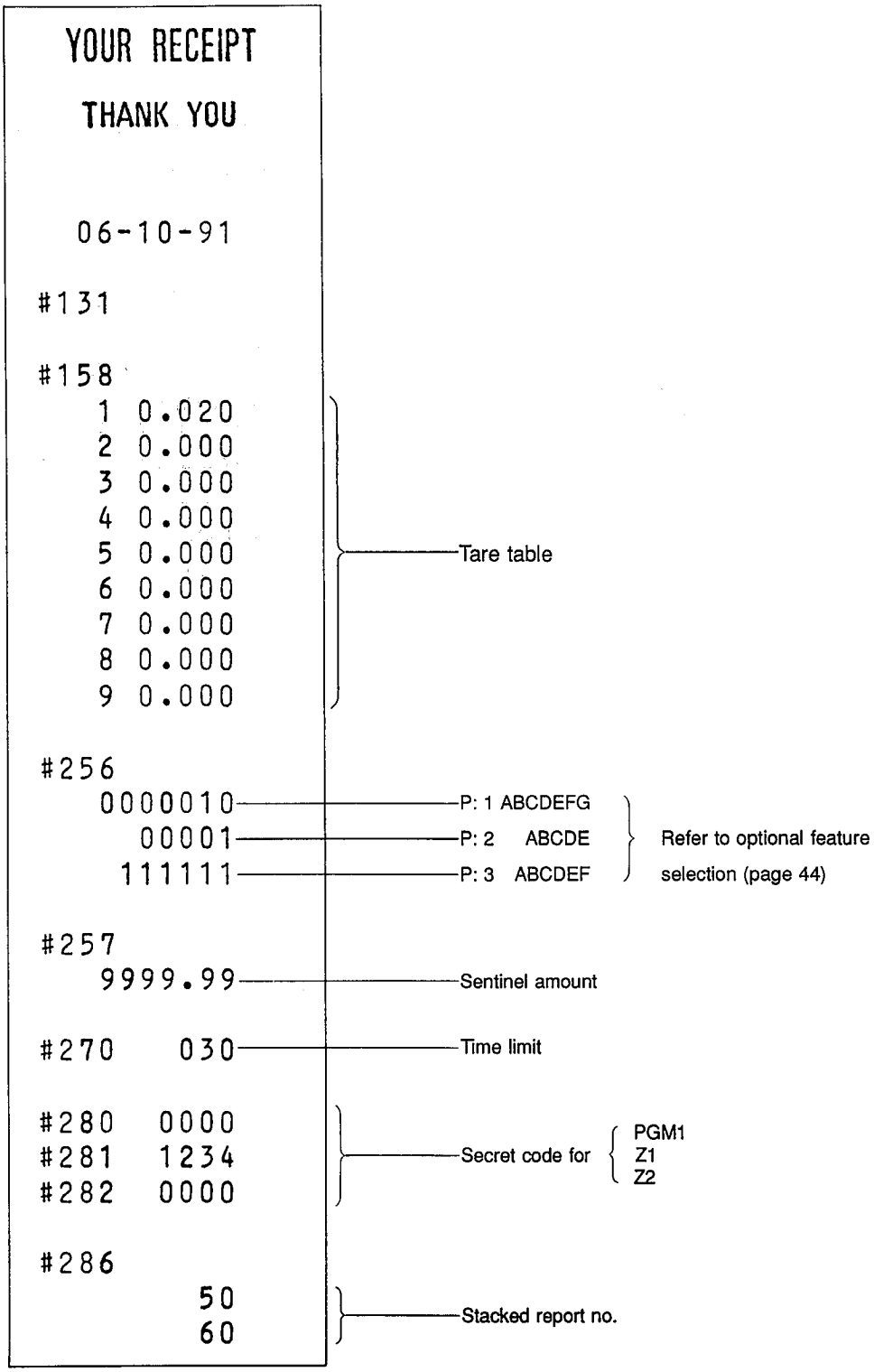

5) Reading of programmed tax tables and rates: Job #240
(Reading in the PGM2 mode)

Reading procedure

240 → @/FOR → CA/AT

```
YOUR RECEIPT
THANK YOU

06-10-91

#240

Tx1   6.0000%
        1.00
 001    0.11
 002    0.23
 003    0.39
 004    0.57
 005    0.73
 006    0.89
 007    1.11
Tx2   4.0000%
        0.12
Tx3  10.0000%
        0.54
```

Tax table

Tax 2 rate

Tax 3 rate

6) Reading of programmed items for cashiers: Job #150
(Reading in the PGM1 and PGM2 modes)

Reading procedure

150 → @/FOR → CA/AT

```
YOUR RECEIPT
THANK YOU

06-10-91

#150

№.1   1
№.2   2
```

Cashier no.

Drawer no.

7) Reaing of programmed link PLUs: Job #225
(Reading in the PGM1 and PGM2 modes)

Reading procedure

225 → @/FOR → XXXX → @/FOR → YYYY → CA/AT

For individual reading

XXXX: Reading start PLU code
YYYY: Reading end PLU code

```
YOUR RECEIPT
THANK YOU

06-10-91

#225

#0001 0003
      0004
      0005
```

Link PLU/linked PLU code (max. 3 PLUs)

8. SRV mode programming

To go into SRV mode, the service key (LKGIM7113RCZZ) is required for service mode programming.

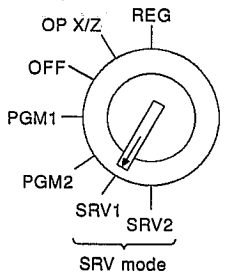

SRV1: Used for setting the programming in the service mode.

SRV2: Used for reset operation.

8-1. Reset Operation

(1) Master Reset 1 & 2

When the Master Reset is executed, the data stored in all the memories will be initialized. All the totalizers/counters/date and time are cleared to zeroes.
Master resetting is available in two ways: MRS1 and MRS2. MRS1 performs initial settings including the key layout. MRS2 performs initial settings excluding the key layout.

[Key Operation]

MRS1: 1) Turn the mode SW to SRV2.
2) While holding down JOURNAL FEED key, turn to SRV1.

MRS2: 1) Turn the mode SW to SRV2.
2) While holding down JOURNAL FEED key and the RECEIPT FEED key, turn the mode SW to SRV1.

(2) Program Reset

- **method 1**

By unplugging and plugging in the AC cord in the SRV1 mode, the register returns to initial status even while in a locked status or any registration.

However, all the data before the reset is maintained.

∗ Note that CKDCIII is not reset.

- **method 2**

1) Set the mode switch to SRV2 position.
2) Turn to SRV1 position from SRV2 position.

- **method 3**

1) Set the mode switch to PGM2 position.
2) Unplug the AC power cord
3) While holding down Journal FEED key and Receipt FEED key, plug in the AC cord.

∗ Note that CKDCIII is not reset.

8-2. SRV mode programming

(1) Programming procedure

Key operation

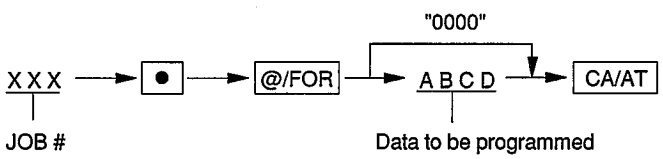

(2) SRV1 mode JOB# Table

JOB#	Function
901	TAB setting
902	RS232C, Simple IRC, Till Timer Yes/No.
903	SIO loader-dumper baud rate, Scale function Auto/Manual tare weight, Scaling unit LB/kg, Food stamp system
904	Gallon q'ty frecation treatment, Gallon q'ty decimal point, Gasoline unit TAB setting.
905	Not used
906	Bottle return Yes/No, HASH setting Enable/Disable, Split pricing counting, Multiplication method, Fractional quantity
907	Void mode Enable/disable
908	GTs printing selection on Z report, GT1 print Yes/No on X void mode Transaction, Printing X/Z report R & J/J only GT resetting at-Z.
909	Void-mode totalizer on Z2 printing
910	Individual-casher sales total, Casher code entry Casher key type, Number of cashiers, Cashier code
911	Fraction treatment
912	Date print format, Time indication system, After transaction receipt format, Copy recipt VP printing 2 lines/ 1 line
913	Tax printing when taxable subtotal is zero, VP format VP amount, SBTL printing, Error beep, key buffer clearing at the end of transaction, Drawer close operation Error mode, key catch sound
914	Receipt issuing at no-sale, NS key separation, Tax delete No-sale after # entry, Non-add code entry for each item Manual tax, cash & checking Enable/Disable, Non-add code entry Enable/Disable
915	Currency symbol "$"/" ", printing of [–] key "CP"/"–" ST%, ST(–) operation, RA media tendering Cash only/Mixed
916	Negative merchandise subtotal, Compulsory subtotal entry, Food stamp subtotal entry, Coupon PLU, Net sales subtotal check change total
917	Taxable TTL (X/Z) print/No
918	Split tender/Direct tender
919	Zero print of PLU unit price, Printing of subtotal foreign currency exchange
970 ~ 973	Memory allocation programming
950 ~ 951	Freekey layout function
930 933 ~ 936 939	Z counter presetting
942 ~ 945	GT counter presetting
946	PGM2 secret code presetting
996	SIO DATA sending
998	SIO DATA receiving

(3) Data to be programmed

Note: "MRS = XXXX" shows the initial preset values (same as the values after master resetting.)

X X X X (★ mark is MRS setting)

A B C D

[JOB #901] MRS = 0002

#901-A, B, C: Not used. (Fixed to "000".)

#901-D: Tabulation

Tabulation	901-D	
TAB = 0 (0)	0	
TAB = 1 (0.0)	1	
TAB = 2 (0.00)	2	★
TAB = 3 (0.000)	3	

Note: The factory preset value may vary according to destinations.

[JOB#902] MRS = 0000

#902-A: 1. Choice of RS-232C option (ER-20RS)
2. Choice of simple inline option (ER-20IN)*

1. RS-232C	2. Simple inline	902-A	
No	No	0	★
	Yes	1	
Yes	No	2	
	Yes	3	

* Requires ER-01RA RAM Chip

#902-B: Not used (FIXED TO "0")

#902-D: Choice of Till timer (drawer opening counter) function*

Till timer	902-D	
NO	0	★
YES	2	

* Must install option drawer open sensor switch.

[JOB #903] MRS = 0000

#903-A: SiO loader dumper baud rate setting.

Baud rate	903-A	
9600 bps	0	★
4800 bps	1	
2400 bps	2	
1200 bps	3	
600 bps	4	
300 bps	5	

#903-B: Not used (Fixed to "0")

#903-C: 1. Choice of scale
2. Entry of tare weight
3. Type weight

1. Choice of scale	2. Entry of tare weight	3. Type weight	903-C	
Manual	Disable	lb	0	★
		kg	1	
	Enable	lb	2	
		kg	3	
Auto	Disable	lb	4	
		kg	5	
	Enable	lb	6	
		kg	7	

#903-D: Food stamp system (FS = Food stamp)

Food stamp	903-D	
No FS	0	★
Tax payable by CASH	1	
Tax payable in FS	2	
FS TAX, forgiveness	3	

[JOB #904] MRS = 0000

#904-A: 1. Fractional treatment for gallonage Q'TY calculation.

1. Fractional treatment	904-A	
Round off	0	★
Round up	1	
Round down	2	

#904-B: 1. Decimal point position for gallonage quantity.

1. Decimal point position	904-B	
0	0	★
1	1	
2	2	
3	3	

904-C: Not used (Fixed to "0")

904-D: 1. Tabulation setting for gasoline unit price
2. Gasoline function

1. Tabulation for gasoline	2. Gasoline function	904-D	
TAB = 2 (0.00)	No	0	★
	Yes	1	
TAB = 3 (0.000)	No	2	
	Yes	3	

[JOB #905] MRS = 0000

#905-A, B, C, D: Not used. (Fixed to "0000".)

[JOB #906] MRS = 0001

#906-A: Not used. (Fixed to "0".)

#906-B: 1. Bottle return function
2. Hash departments

1. Bottle return	2. Hash departments	906-B	
Disable	Disable	0	★
	Enable	2	
Enable	Disable	4	
	Enable	6	

#906-C: 1. Split price quantity count
2. Multiplication method

1. Split pricing counting	2. Multiplication method	906-C	
Quantity	Multiplication	0	★
	Successive multiplication	1	
	Split pricing	2	
Package	Multiplication	4	
	Successive multiplication	5	
	Split pricing	6	

#906-D: 1. Fractional quantity

1. Fractional quantity	907-D	
No decimal places	0	
3-digit decimal places	1	★

[JOB #907] MRS = 0000

#907-A, B, C: Not used. (Fixed to "000".)

#907-D: Void mode Enable/disable

Void mode	907-D	
Enable	0	★
Disable	2	

[JOB #908] MRS = 0000

#908-A: GT print on Z report

GT1 (NET)	GT2 (+)	GT3 (–)	908-A	
Print	Print	Print	0	★
		Skip	1	
	Skip	Print	2	
		Skip	3	
Skip	Print	Print	4	
		Skip	5	
	Skip	Print	6	
		Skip	7	

#908-B: GT1 print on X report

GT1	908-B	
Skip	0	★
Print	4	

#908-C: Add Void-mode transaction data to hourly total.

Add void mode transactions to Hourly totals	908-C	
Disable	0	★
Enable	4	

#908-D: 1. Printing X/Z report Journal only/Receipt & Journal
2. Z1 resetting that resets GT Enable/Disable

1. Printing X/Z report	2. GT resetting at-Z1	908-D	
Receipt & Journal	Disable	0	★
	Enable	1	
Journal	Disable	4	
	Enable	5	

[JOB #909] MRS = 0000

#909-A, B: Not used (Fixed to "00")

#909-C: 1. Printing of data in void-mode totalizer on Z2 report

1. Void-mode totalizer on Z2 printing	909-C	
Disable	0	★
Enable	4	

#909-D: Not used (Fixed to "0")

[JOB #910] MRS = 2006

#910-A: 1. Individual-cashier sales total Tax included

1. Individual-cashier sales total	910-A	
Net amount	0	
Tax included	2	★

#910-B: 1. Cashier code entry Compulsory/Noncompulsory

1. Cashier code entry	910-B	
Noncompulsory	0	★
Compulsory	1	

#910-C: Not used (Fixed to "0")

#910-D: 1. Cashier key type
2. Number of cashiers
3. Cashier code

1. Cashier key type	2. Number of cashiers	3. Cashier code	910-D	
Stay down type	4-cashier	Disable	0	
		Enable	1	
	2-cashier	Disable	2	
		Enable	3	
Barrel-lock type	4-cashier	Disable	4	
		Enable	5	
	2-cashier	Disable	6	★
		Enable	7	

[JOB #911] MRS = 0000

#911-A: 1. Fraction treatment

1. Fraction treatment	911-A	
Round off	0	★
Round up	1	
Round down	2	

#911-B, C, D: Not used (Fixed to "000")

[JOB #912] MRS = 0000

#912-A: 1. Data print format

Date format	912-A	
Month/Day/Year	0	★
Day/Month/Year	1	
Year/Month/Day	2	

#912-B: 1. Time indication system

1. Time system	912-B	
12H	0	★
24H	1	

#912-C: 1. After transaction receipt format*
2. Copy receipt*

After transaction receipt	Copy receipt	912-C	
Total only	No	0	★
	Yes	2	
Detail	No	4	
	Yes	6	

* Requires ER-01RA RAM CHIP

#912-D: 1. Validation printing in 2 line/1 line

1. Validation printing	912-D	
1 line	0	★
2 line	1	

[JOB #913] MRS = 1004

#913-A: 1. Tax printing when taxable subtotal is zero
2. VP format
3. Content of TOTAL VP amount

VP = Validation print

1. Tax printing	2. VP format	3. VP amount	913-D	
Disable	Date & amount	Total amount	0	
		Tendered amount	1	★
	Machine# & amount	Total amount	2	
		Tendered amount	3	
Enable	Date & amount	Total amount	4	
		Tendered amount	5	
	Machine# & amount	Total amount	6	
		Tendered amount	7	

#913-B: 1. Subtotal printing when [SBTL] key is pressed.
2. Merchandise subtotal printing when [MDSE SBTL] key is pressed.

1. SBTL PRINTING	2. MDSE SBTL PRINTING	913-B	
Disable	Disable	0	★
	Enable	1	
Enable	Disable	2	
	Enable	3	

#913-C: 1. Buzzer off 2 sec after lock error.
2. Key buffer clearing at the end of transaction.

Error beep	Key buffer clearing at the end of transaction	913-C	
2-second off	Enable	0	★
	Disable	1	
Continuous	Enable	2	
	Disable	3	

#913-D: 1. Drawer closing operation compulsory, Requires drawer open sensor kit (DKIT-3376RCZZ)
2. All Lock or lock and one shot
3. Key catch sound

Drawer closed compulsory	Error mode	Key catch sound	913-D	
Disable	All lock error	Enable	0	
		Disable	1	
	Lock and one shot	Enable	2	
		Disable	3	
Enable	All lock error	Enable	4	★
		Disable	5	
	Lock and one shot	Enable	6	
		Disable	7	

[JOB #914] MRS = 0002

#914-A: 1. Receipt issuing at no-sale
2. [NS] key separation from [CA/AT] key for no sale function Yes/No
3. Tax delete operation Enable/Disable

1. Receipt issuing at no-sale	2. [NS] key separation	3. Tax delete	914-A	
Enable	Yes	Disable	0	★
		Enable	1	
	No	Disable	2	
		Enable	3	
Disable	Yes	Disable	4	
		Enable	5	
	No	Disable	6	
		Enable	7	

#914-B: No-sale after NON ADD code entry

No-sale after # entry	B	
Disable	0	★
Enable	1	

#914-C: Non-add code entry for each item (except hash item) compulsory/non-compulsory

Non-add code entry for each item	914-C	
Non-compulsory	0	★
Compulsory	4	

#914-D: 1. Manual tax Disable/Enable
2. CASH, CHECKING Enable/Disable
3. Non-add code entry Disable/Enable

1. Manual tax	2. CASH, CHECKING	3. Non-add code entry	914-D	
Enable	Disable	Enable	0	
		Disable	1	
	Enable	Enable	2	★
		Disable	3	
Disable	Disable	Enable	4	
		Disable	5	
	Enable	Enable	6	
		Disable	7	

[JOB #915] MRS = 0000

#915-A: 1. Currency symbol

1. Currency symbol	915-A	
"$"	0	★
" "	2	

#915-B: 1. Printing of [–] key "CP"/"–"

1. Printing of [–] key	915-B	
"–"	0	★
"CP"	1	

#915-C: 1. ST%, ST(–) operation only once/As many times as needed
2. RA type

1. ST%, ST(–) operation	2. RA media tendering	915-C	
Unlimited	With tendering	0	★
	Direct	1	
Once only	With tendering	2	
	Direct	3	

#915-D: Not used (Fixed to "0")

[JOB #916] MRS = 0000

#916-A, B: Not used. (Fixed to "00".)

#916-C: 1. Negative merchandise subtotal Disable/Enable
2. Subtotal entry compulsory/non-compulsory
3. Food stamp subtotal entry before food stamp tendering compulsory/non-compulsory

Negative merchandise subtotal	Compulsory Subtotal entry	Food stamp subtotal entry	916-C	
Enable	Disable	Non-compulsory	0	★
		Compulsory	1	
	Enable	Non-compulsory	2	
		Compulsory	3	
Disable	Disable	Non-compulsory	4	
		Compulsory	5	
	Enable	Non-compulsory	6	
		Compulsory	7	

#916-D: 1. Coupon PLU printing on X/Z report
2. NET sales subtotal printing on X/Z report
3. CHECK change total printing on X/Z report

1. Print minus PLU's on general report	2. Print net sales SBTL on general report	3. Print CHK CHANGE on general report	916-D	
Enable	Enable	Enable	0	★
		Disable	1	
	Disable	Enable	2	
		Disable	3	
Disable	Enable	Enable	4	
		Disable	5	
	Disable	Enable	6	
		Disable	7	

[JOB #917] MRS = 0000

#917-A: 1. Taxable 1 subtotal on X/Z report: Print or Skip.
2. Gross Tax 1 and refund Tax 1 total on X/Z report: Print or Skip
3. Net Tax 1 total on X/Z report: Print or Skip

Taxable 1 subtotal on X/Z report	Gross Tax1 and refund Tax1 total on X/Z report	Net Tax1 total on X/Z report	917-A	
Print	Print	Print	0	★
		Skip	1	
	Skip	Print	2	
		Skip	3	
Skip	Print	Print	4	
		Skip	5	
	Skip	Print	6	
		Skip	7	

#917-B: 1. Taxable 2 subtotal on X/Z report: Print or Skip
2. Gross Tax 2 and refund Tax 2 total on X/Z report: Print or Skip
3. Net Tax 2 total on X/Z report: Print or Skip

Taxable 2 subtotal on X/Z report	Gross Tax2 and refund Tax2 total on X/Z report	Net Tax2 total on X/Z report	917-B	
Print	Print	Print	0	★
		Skip	1	
	Skip	Print	2	
		Skip	3	
Skip	Print	Print	4	
		Skip	5	
	Skip	Print	6	
		Skip	7	

#917-C: 1. Taxable 3 subtotal on X/Z report: Print or Skip
2. Gross Tax 3 and refund Tax 3 total on X/Z report: Print or Skip
3. Net Tax 3 total on X/Z report: Print or Skip

Taxable 3 subtotal on X/Z report	Gross Tax3 and refund Tax3 total on X/Z report	Net Tax3 total on X/Z report	917-C	
Print	Print	Print	0	★
		Skip	1	
	Skip	Print	2	
		Skip	3	
Skip	Print	Print	4	
		Skip	5	
	Skip	Print	6	
		Skip	7	

#917-D: 1. Total Tax amount on X/Z report: Print or Skip
2. Gross manual Tax and refund manual Tax on X/Z
3. Net manual Tax total on X/Z report: Print or Skip

Total Tax Amount	Gross manual Tax and Refund manual Tax on X/Z report	Net manual Tax total on X/Z report	917-D	
Print	Print	Print	0	★
		Skip	1	
	Skip	Print	2	
		Skip	3	
Skip	Print	Print	4	
		Skip	5	
	Skip	Print	6	
		Skip	7	

[JOB #918] MRS = 2000

#918-A: Allow direct finalization after depression of the first tender key when split tendering, or require amount tender on second tender.

Split tender direct finalization	918-A	
Disable	0	
Enable	2	★

#918-B, C, D: Not used (Fixed to "000")

[JOB #919] MRS = 0000

#919-A, B: Not used. (Fixed to "00".)

#919-C: Printing the amount or just the PLU # on a zero price PLU

Print amount on zero price PLU	919-C	
Disable	0	★
Enable	1	

#919-D: Print currency conversion SBTL

Print currency conversion SBTL	919-D	
Enable	0	★
Disable	1	

[JOB #971]

Memory allocation control

The ER2595 allows selecting various kinds of optional memories freely and allocating them on its hard memory, regarding the optional memory as a file. For file control, the following operations are available.

File programming. (File creation, deletion, charge of the number of records or blocks).

Key operation

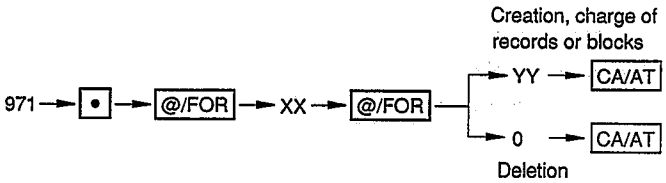

This operation is performed to increase or reduce the number of records in a file or to create or delete a file.

Table #	File name
1	DEPT
4	CASHIER
8	PLU
9	REG BUFFER (For SBTL VD/After issued Receipt)
10	ALL OF TERM FILE
16	LINK PLU

FILE TABLE

ER2595

TABLE NO.	FILE NAME	FILE NO.	NO. OF RECORD		NO. OF BLOCK		LABEL SIZE	RECORD LENGTH	MEMORY SIZE
			DEFAULT	MAX	DEF.	MAX			
1	DEPT	01	32	52	1	1	0	21	672/1092
2	TRANSACTION	02	70	70	1	1	0	8	560
4	CASHIER TRANS.	03	36	36	4	4	0	8	1152
5	HOURLY	04	48	48	1	1	0	8	384
8	PLU	05	170	about (*1) 7000	1	1	2	19	3230/
9	REG BUFFER	07	130	130	1	1	0	32	4160
10	TERM DEPT	09	32	52	1	1	0	14	448/ 728
11	TERM TRNS.	0A	70	70	1	1	0	8	560
13	TERM CASHIER	0B	36	36	4	4	0	8	1152
16	LINK PLU	06	30	30	1	1	2	8	240
17	DAILY NET	08	32	32	1	1	3	11	352
19	CONSOL. DEPT	0C	32	52	1	1	0	14	448/ 728
20	CONSOL. TRANS.	0D	70	70	1	1	0	8	560
21	CONSOL. HOURLY	0F	48	48	1	1	0	8	384
22	CONSOL. PLU	10	170		1	1	2	11	1870/
23	RECEIVE DEPT	17	32	52	1	1	0	14	448/ 728
24	RECEIVE TRANS.	18	70	70	1	1	0	8	560
25	RECEIVE HOURLY	1A	48	48	1	1	0	8	384
26	RECEIVE PLU	1B	170		1	1	2	11	1870/
27	SAVE DEPT	12	32	52	1	1	0	14	448/ 728
28	SAVE TRANS.	13	70	70	1	1	0	8	560
29	SAVE HOURLY	15	48	48	1	1	0	8	384
30	SAVE PLU	16	170		1	1	2	11	1870/
31	CONSOL. CASHIER	0E	36	36	4	4	0	8	1152
32	CONSOL. DAILY NET	11	32	32	1	1	3	11	352
33	RECEIVE CASHIER	19	36	36	4	4	0	8	1152
34	RECEIVE DAILY NET	1C	32	32	1	1	3	11	352
35	SAVE CASHIER	14	36	36	4	4	0	8	1152

*1: With ER02RA (Standalone machine)

Free Key Layout Programming

Free key layout programming applies to all the keys except for the receipt feed key and journal feed key.

The number of key positions to which keys are allocable is 106.

For free key layout programming, the keys are divided into the following three groups:

Group 1: Numerics keys ([0] to [9] and [00]), [•], [CL], [@/FOR], [SBTL], and [CA/AT] keys

Group 2: Department keys

Group 3: Other function keys than the Group-1 and Group-2 keys.

1. Programming of Group-1 keys.

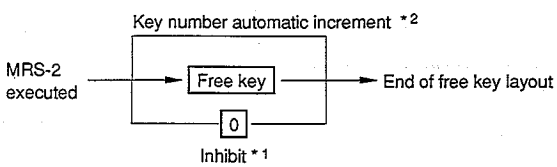

NOTE: *1: The [0] key is the first to be programmed. After that programming, a depression of the [0] key in any other key programming will inhibit the key whose number is on the display. The [0] key cannot be inhibited.

*2: Press the key to whose position a particular key is to be assigned. The key whose number is displayed is thereby assigned to the key position of the key pressed.

Key number	Key name	Key number	Key name
1	Numeric key "0"	10	Numeric key "9"
2	Numeric key "1"	11	"00"
3	"2"	12	"000"*
4	"3"	13	"•"
5	"4"	14	"CL"
6	"5"	15	"@/FOR"
7	"6"	16	"SBTL"
8	"7"	17	"CA/AT"
9	"8"		

* If "000" key is not desired, simply depress the key where you are going to place the "CL" key, and when you place the "CL" key you will erase the "000" key.

2. Key position programming of Group-1 and Grou-3 keys

#950: Free key layout (excluding department keys)

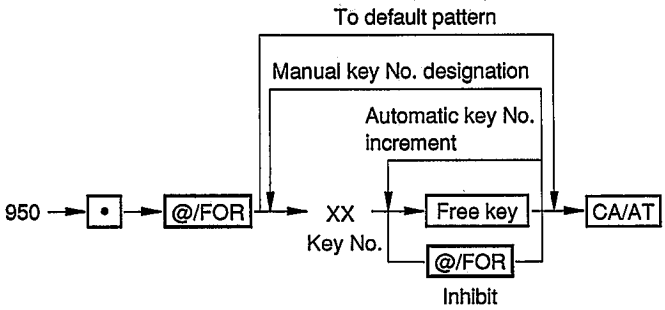

NOTE: When the key No. 999 is entered (displayed), the key position of the key depressed will be inhibited.

3. Key position programming of Group-2 keys (Department keys)

#951:

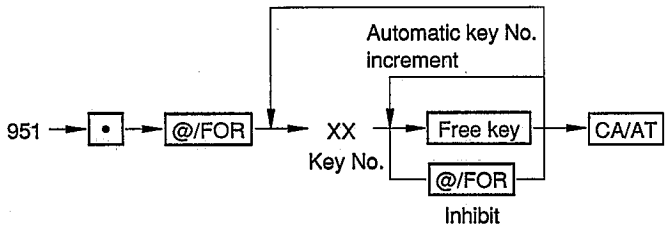

The key numbers available are 1 through 52.
When the key No. 999 is entered (displayed), the key position of the key pressed will be unusued (inhibited).

FUNCTION KEY LIST (Group 1 and Group 3)

NO.	FUNCTION	NO.	FUNCTION
1	0 KEY	28	(–)1
2	1 KEY	29	(–)2
3	2 KEY	30	(–)3
4	3 KEY	31	(–)4
5	4 KEY	32	%1
6	5 KEY	33	%2
7	6 KEY	34	%3
8	7 KEY	35	%4
9	8 KEY	36	MDSE SBTL
10	9 KEY	37	TRAY TOTAL
11	00 KEY	38	GAS SBTL
12	000 KEY	39	TAX
13	.	40	CASH2
14	CL	41	CHECK
15	@/FOR	42	CHARGE1
16	SBTL	43	CHARGE2
17	CA/AT	44	CHARGE3
18	SCALE	45	CHARGE4
19	PLU/SUB	46	CHARGE5
20	TAX1 SHIFT	47	FS TEND
21	TAX2 SHIFT	48	CONVERSION
22	TAX3 SHIFT	49	RA
23	FS SHIFT	50	PO
24	REFUND	51	NS
25	RF SALES	52	PRINT
26	VOID	53	RCPT
27	#		

[JOB #930, 933, 934, 935, 936, 939] Z counter presetting MRS = 000

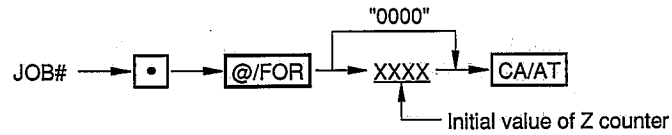

JOB#	Function
930	Z1 GENERAL
933	Z1 CASHIER
934	Z1 PLU
935	Z1 HOURLY
936	Z2 GENERAL
939	DAILY NET

[JOB #942, 943, 944, 945] GT counter presetting MRS = 0000000

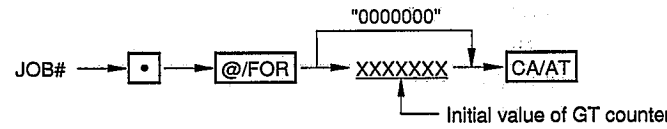

JOB #	Function
942	GT2 High-order 6 digits
943	GT2 Low-order 7 digits
944	GT3 High-order 6 digits
945	GT3 Low-order 7 digits

NOTE: GT1 is obtained by calculation
Equation: GT1 = GT2 – GT3

[JOB #946] PGM2 secret code presetting MRS = 0000

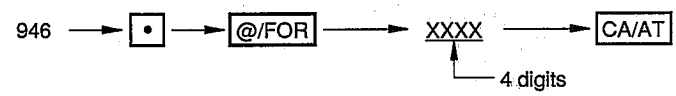

NOTE: When the secret code "0" is programmed, the secret code entry is be inhibited.

[JOB #996] SIO DATA sending

[JOB #998] SIO DATA receiving

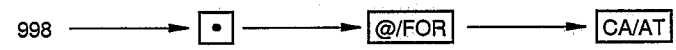

SRV mode program reports

The three kinds of SRV mode program reports are available as shown below:

JOB #	Function
900	SRV mode program full item report (excluding key layout)
950	Key layout programming report
951	Key layout programming report

9. PGM1, PGM2 (PROGRAM) MODES

The are two programming modes are PGM1 and PGM2, Each one assigned with a set function.

In the PGM1 mode, it is possible to use JOB#100 thru #199 (100 series). In the PGM2 mode, it is possible to use JOB#200 thru #299 (200 series), in addition to the PGM1 mode (100 series). Descriptions will be provided later in this section discussing details.

Basic programming format for PGM1 and PGM2 modes are as follows:

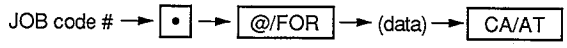

Secret code entry

To start the operation of ECR in PGM2, PGM1, X1, Z1/X2/Z2 mode, the secret code which has been preset for the each mode should be entered by the following procedure.

Procedure

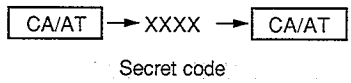

The secret code for PGM1, X1, Z1/X2/Z2 mode is preset in the PGM2 mode (JOB#280) and the code for PGM2 mode is preset in the SRV mode (JOB#946). Once the secret code has been entered, re-entry is not necessary to continue the operation in the same mode. If the secret number has been preset as "0", no secret code entry is necessary.

9-1 Printing of program reports

Key entry sequence

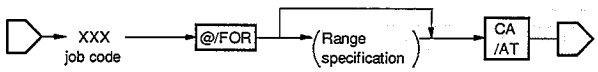

List of program reports

Job code	Report name
110*	Department programming
120*	PLU code programming
130	Programming of % rates and other functions (including the programming for the method of each transaction)
225*	Linked PLU programming
240	Tax table programming
150	Cashier programming
131	Miscellaneous programming

The reports on those programming jobs whose job codes are between 100 and 199 can be printed in both the PGM1 and PGM2 modes.

The reports on those programming jobs whose job codes are between 200 and 299 can be printed in the PGM2 mode.

★

Range specification for program reports

Those program reports asterisked in the above list requires range specifications. If no range is specified, an error occurs when the CA/AT Key is pressed.

Range specification can be accomplished by using the following procedure.

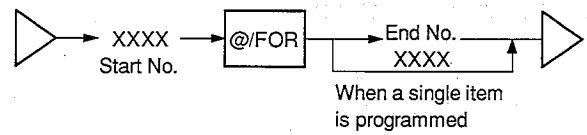

Pressing the CA/AT key prints a report on the receipt and journal.

9-2 JOB CODE LIST

JOB NO	PROGRAMMING	Page
110	DEPT. PRICE	36
210	DEPT. FUNCTION	36
211	DEPT. MODIFY	36
212	AMOUNT FOR DEPTS	36
216	DEPT. Group	36
120	PLU PRICE	36
121	PLU ASSOCIATED-DEPT	37
220	PLU FUNCTION	37
221	PLU MODIFY	37
225	LINKED PLU	37
130	RATE	37
260	MEDIA KEY	37
231	MISC KEY PROGRAMMING-1	38
232	FUNCTION KEY HALO	38
262	MEDIA KEY HALO PROGRAMMING-2	38
261	MEDIA KEY HALO PROGRAMMING-1	39
235	MISC KEY PROGRAMMING-2	39
236	MISC KEY PROGRAMMING 3	39
239	MISC KEY PROGRAMMING-4	39
240	TAX TABLE	39
241	% TAX RATE	39
158	SCALE TARE TABLE	39
259	CASHIER DRAWER NO.	39
256	OPTIONAL FEATURE	40
257	SENTINEL AMOUNT	40
250	DATE	40
251	TIME	40
252	MACHINE NO.	41
253	CONSECUTIVE NO.	41
286	STACK REPORT	41
270	TILL TIMER	41
271	GALLON DISCOUNT AMOUNT	41
280-282	SECRET CODE	41

9-3 PROGRAMMING

[JOB#110]

PROGRAMMING OF DEPT. PRICE

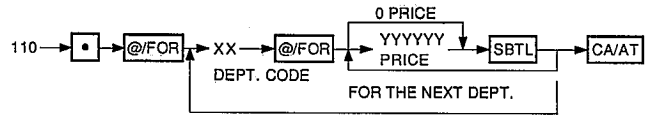

XX: 0~52 max.
YYYYYY: 0~999999

Preset price is max. 6 digits.

Price can be programmed for each dept. If this programming is performed, the ECR is automatically programmed to allow preset price entry even when it has not been programmed to allow preset price entry in dept. function programming (JOB#210).

MRS=0.00

[JOB#210]

DEPT. FUNCTION PROGRAMMING MRS=00001

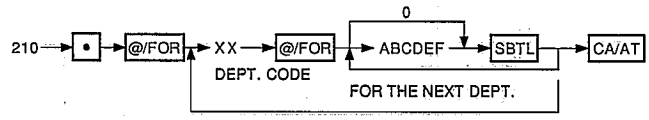

XX: DEPT. CODE (01 to 52 max.)

A:

Item validation printing	210-A
Non-compulsory	0
Compulsory	1

B:

Tare table number	210-B
No tare function	0
1 ~ 9	1 ~9

C:

Scale entry	210-C
Inhibited	0
Allowed	1

D:

SICS Function	210-D
Normal	0
Single item cash sale	1
Single item finalize	2

E:

Selection of the group	210-E
Normal	0
Hash	1
Gasoline	2
Bottle return	3

F:

Amount entry type	210-F
Inhibited	0
Open	1
Preset	2
Open and preset	3

* A selection of the group "Bottle return" is inhibited when the bottle return function is programmed as inhibited in SRV mode (906-B).
A selection of the group "Hash" is inhibited when the hash function is programmed as disabled in SRV mode (906-B).
When the group is "Gasoline", the amount entry type (Parameter E above) cannot be programmed for "Preset".

[JOB#211]

DEPT. TAX STATUS AND SIGN PROGRAMMING

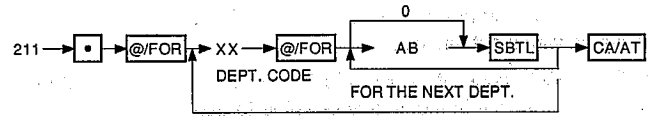

This programming is intended to decide the sign, tax status, and food stamp status.

A:	SIGN –	= 1
	+	= 0
B:	FOOD STAMPABLE	= 1
	NON-FOOD	= 0
C:	Taxable by TAX 3	= 1
	Non-taxable 3	= 0
D:	Taxable by TAX 2	= 1
	Non-taxable 2	= 0
E:	Taxable 1	= 1
	Non-taxable 1	= 0

MRS = 00000

[JOB#212]

PROGRAMMING OF THE DIGIT LIMITATION FOR DEPTS.

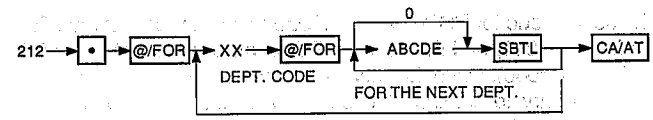

A: MAX DIGIT FIGURE = 1~9
B: NO. OF ZEROS FOLLOWING THE MAX. = 0~7

MRS = 17

*"17" stands for 10000000. Up to 9999999 can be entered as amount.

[JOB#216]

PROGRAMMING OF DEPT. Group

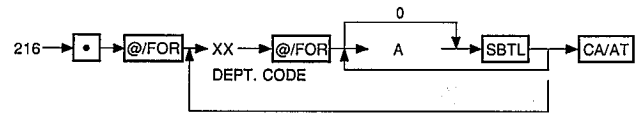

DEPT. code: 01~52
A:Group number (0~9)

MRS = 0

[JOB#120]

PRICE PROGRAMMING FOR PLU'S

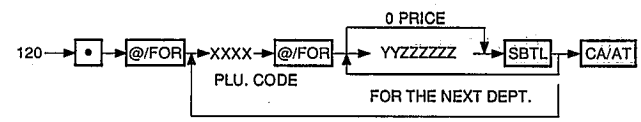

XXXX: PLU. CODE (1 to 9999)
YY: Base quantity or Base weight (0 to 99)
ZZZZZZ: Amount (0 to 999999)

Price programming for a PLU requires that the PLU has been created in JOB#121.

Note: When a sub-department is programmed, the price becomes the digit amount limitation of the sub-department.

[JOB#121]

PROGRAMMING OF DEPARTMENTS TO BE ASSOCIATED WITH PLU"S

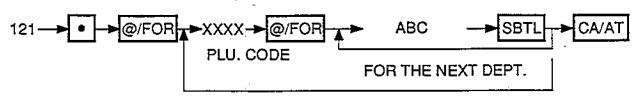

a: DELETE/PLU/SUB-DEPT/INHIBT = 3/2/1/0
bc: DEPT. CODE = 1~40

"INHIBIT" means that the PLU code and the contents of programming remain valid, but that any entry cannot be made for the PLU.

MRS=201

[JOB#220]

PLU function programming

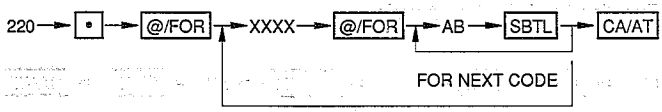

XXXX: PLU-code (1 to 9999)

A:

Tare table number	220-A
No tare function	0
1 ~ 9	1 ~ 9

B:

Scale	220-B
Inhibit	0
Enable	1
Compulsory	2

[JOB#221]

PLU MODIFY PROGRAMMING

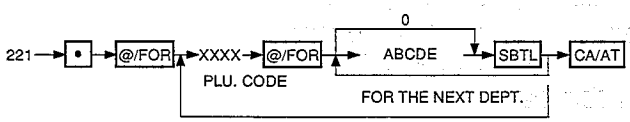

This programming is intended to decide the sign, tax status, and food stamp status for PLU's.

A: SIGN – = 1
+ = 0
B: FOOD STAMPABLE = 1
NON-FOOD = 0
C: Taxable by TAX 3 = 1
Non-taxable 3 = 0
D: Taxable by TAX 2 = 1
Non-taxable 2 = 0
E: Taxable by TAX 1 = 1
Non-taxable 1 = 0

MRS = 0000

[JOB#225]

Linked PLU programming

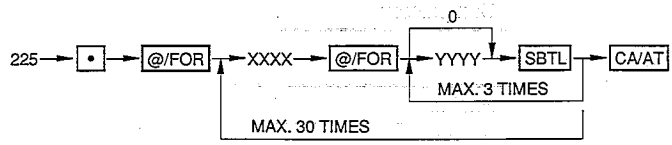

XXXX: PLU code 1 ~ 9999
YYYY: Linked PLU code 1 ~ 9999

When the "ST" key is pressed without entering any number as the first PLU code, the previous data is cleared.

When one or two link PLU codes (YYYY) are assigned to a PLU code (XXXX), enter the next PLU code (XXXX) after assigning the link PLU code or codes (YYYY).

PLU codes should already be defined when they are used in programming here.

[JOB#130]

RATE PROGRAMMING

THIS PROGRAMMING IS INTENDED TO PRESET % RATE AND CONVERSION RATE.

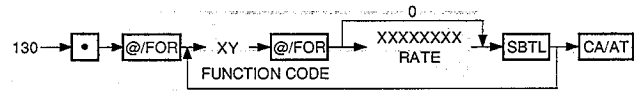

FUNCTION	XY	XXXXXXX	Remarks
⊖1	3	0.00 ~ 9999.99	⊖ unit price
⊖2	4		
⊖3	5		
⊖4	6		
%1	7	0.00 ~ 100.00	% rate
%2	8		
%3	9		
%4	10		
CONVERSION	56	0.00 ~ 99999.999	Rate

[JOB#260]

MEDIA KEY programming.

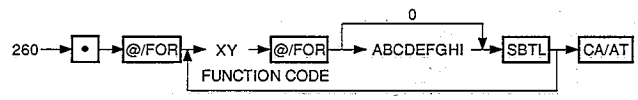

XY: FUNCTION CODE

CA1	= 48
CA2	= 49
CH1	= 58
CH2	= 59
CH3	= 60
CH4	= 61
CH5	= 62
CHK	= 63

A: Automatic markdown for gasoline

No	0
Yes	1

B: Non-add code entry

Non-compulsory	0	★
Compulsory	1	

C: Change due

Enable	0	★
Disable	1	

D: Validation print

Non-compulsory	0	★
Compulsory	1	

E: Taxable 3 delete

No	0	★
Yes	1	

F: Taxable 2 delete

No	0	★
Yes	1	

G: Taxable 1 delete

No	0	★
Yes	1	

H: Drawer open

Yes	0	★
No	1	

I: Entry of amount tendered

Cash/CA2/CHK

Non-compulsory	0	★
Compulsory	1	

CH1~CH5

Inhibited	0
Compulsory	1

Function No.	Function	A	B	C	D	E	F	G	H
48	CA1	O	×	O	O	O	O	O	O
49	CA2	O	×	O	O	O	O	O	O
63	CHK	O	O	O	O	O	O	O	O
58	CH1	O	O	O	O	O	O	O	O
59	CH2	O	O	O	O	O	O	O	O
60	CH3	O	O	O	O	O	O	O	O
61	CH4	O	O	O	O	O	O	O	O
62	CH5	O	O	O	O	O	O	O	O

∗ Items marked with a circle (O) are programmable.

[JOB#231]

MISC KEY PROGRAMMING - 1

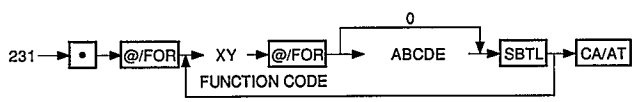

This programming is intended to decide the sign, tax status, and food stamp status for misc keys

xy:	%1	= 7
	%2	= 8
	%3	= 9
	%4	= 10
	(–)1	= 3
	(–)2	= 4
	(–)3	= 5
	(–)4	= 6
A:	SIGN–	= 1
	+	= 0
B:	FOOD STAMPABLE	= 1
	NON-FOOD	= 0
C:	Taxable by TAX 3	= 1
	Non-taxable 3	= 0
D:	Taxable by TAX 2	= 1
	Non-taxable 2	= 0
E:	Taxable by TAX 1	= 1
	Non-taxable	= 0

MRS = 10000

[JOB#232]

Function key HALO paramming

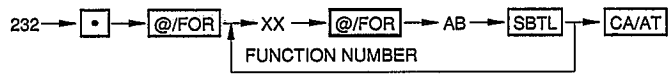

XX: FUNCTION CODE

FUNCTION	XX
⊖1	3
⊖2	4
⊖3	5
⊖4	6
TAX	22
RA	51
PO	52

A: Mantissa = 1 ~ 9
B: Exponent = 0 ~ 8

∗ Entry range, system = $(10 \times A)^B$

MRS = 17 (For ⊖1 ~ 4 and TAX)
= 18 (For RA and PO)

[JOB#262]

Media key HALO programming-2

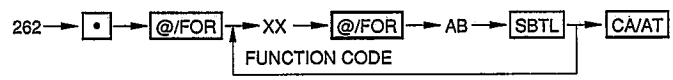

XX: Function code

FUNCTION	XX
CA1	48
CA2	49
CH1	58
CH2	59
CH3	60
CH4	61
CH5	62
CHK	63

A: Mantissa = 1 ~ 9
B: Exponent = 0 ~ 8

Entry range, system = $(10 \times A)^B$

MRS = 18

[JOB#261]

MEDIA KEY HALO-1

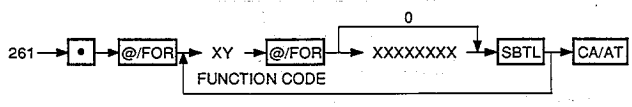

xy:	FUNCTION CODE	
	CHECK CHANGE	= 54
	CASH CHECK	= 53
xxxxxxxx:	AMOUNT LIMIT	= 0~99999999

MRS = 999999.99

[JOB#235]

MISC KEY PROGRAMMING - 2

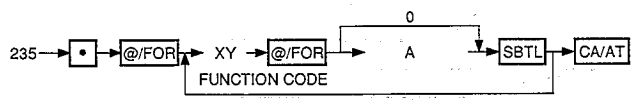

xy:	%1	= 7
	%2	= 8
	%3	= 9
	%4	= 10
A:	ITEM %	= 1
	SBTL %	= 0

MRS = 0

[JOB#236]

MISC KEY PROGRAMMING - 3

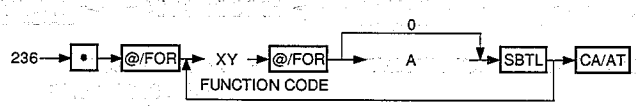

xy:	(–)1	= 3
	(–)2	= 4
	(–)3	= 5
	(–)4	= 6
A:	STORE (–)	= 1
	VENDER (–)	= 0

MRS = 0

[JOB#239]

MISC KEY PROGRAMMING-4

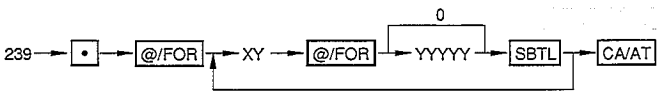

XY:	%1	= 7
	%2	= 8
	%3	= 9
	%4	= 10
YYYYY:	% HALO	= 0.00 ~ 100.00

MRS = 0

[JOB#240]

TAX TABLE PROGRAMMING

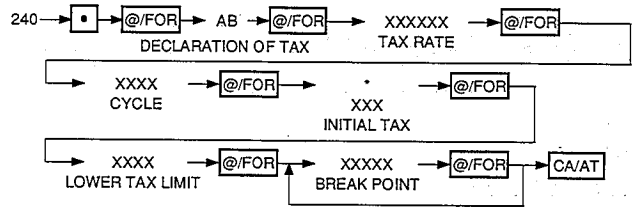

A max of 72 breakpoints can be programmed.

* Depression of the #/ST key at the following points means a tax table delete operation.

A:	Difference in amount from one break point	
	Below 1 dollar	= 0
	Next 1 dollar or over	= 1
B:	TABLE 1 PROGRAMMING	= 1
	TABLE 2 PROGRAMMING	= 2
	TABLE 3 PROGRAMMING	= 3

MRS = NO TABLE

[JOB#241]

% TAX RATE PROGRAMMING

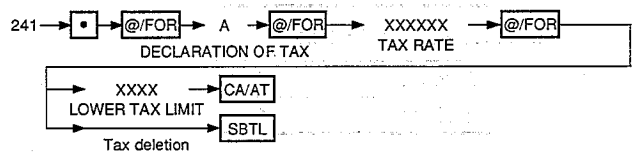

A:	TABLE 1 PROGRAMMING	= 1
	TABLE 2 PROGRAMMING	= 2
	TABLE 3 PROGRAMMING	= 3

% TAX RATE 0.0001~99.9999%
LOWER TAX LIMITATION max. 99.99

MRS = 0

[JOB#158]

Scale tare table programming

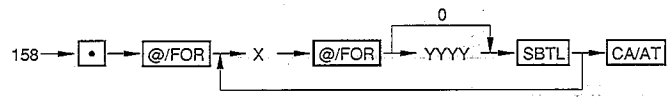

X :	Tare table number.	= 1 ~ 9
YYYY:	Weight	= 0.00 ~ 99.99

[JOB#259]

CASHIER DRAWER ASSIGNMENT

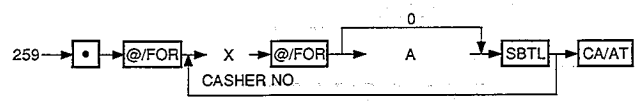

x:	CASHIER NO. (A~E)	= 1~4
a:	DRAWER NO.	= 1~4
	No drawer	= 0

MRS = 1

[JOB#256]

OPTIONAL FEATURE PROGRAMMING

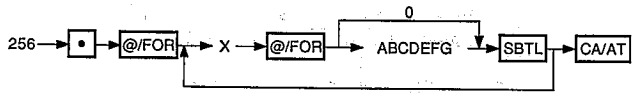

X = 1

A: OP X/Z mode

Allowed	0
Inhibited	1

B: Refund Sales mode in REG mode

Allowed	0
Inhibited	1

C: [RFND] key entry in REG mode

Allowed	0
Inhibited	1

D: Direct void function in REG mode

Allowed	0
Inhibited	1

E: Indirect void function in REG mode

Allowed	0
Inhibited	1

F: Subtotal void in REG mode

Allowed	0
Inhibited	1

G: Refund VP

Noncompulsory	0
Compulsory	1

X = 2

A: Printing of the number of purchases

No	0
Yes	1

B: Time print

Yes	0
No	1

C: Validation printing No. of times of printing

Inhibited	0
No. of times	1 ~ 9

D: Journal select

Full printing	0
Journal select	1

E: Item validation printing

Enable	0
Disable	1

X = 3

A: Zero skip on cashier report

Yes	0
No	1

B: Zero skip in transaction report

Yes	0
No	1

C: Zero skip in department

Yes	0
No	1

D: Zero skip in PLU report

Yes	0
No	1

E: Zero skip in hourly report

Yes	0
No	1

F: Zero skip in dailey net report

Yes	0
No	1

[JOB#257]

SENTINEL AMOUNT PROGRAMMING

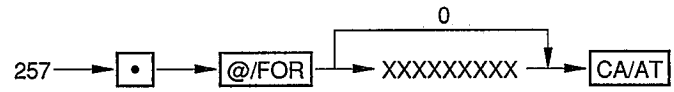

XXXXXXXXX: AMOUNT LIMIT = 0 ~ 999999999
MRS = 9999999.99

[JOB#250]

DATE SETTING

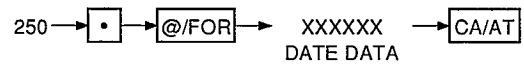

The entry format is the same as the print format (which is decided by srv-mode programming).

A 6-digit integer must be entered for the date setting.

Entering a zero first causes an error.

MRS = 010100

[JOB#251]

TIME SETTING

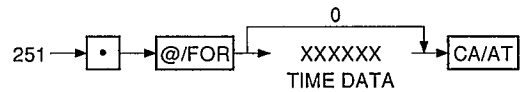

xxxx: 0~2359

The time must be entered on 24-hour system.

A 4-digit integer or smaller one must be entered for the time setting.

MRS = 0000

[JOB#252]

MACHINE NUMBER

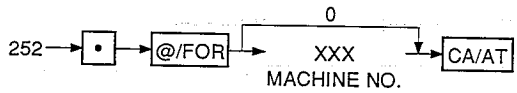

XXX = 0 ~ 9

A 3-digit integer or smaller one must be entered for the machine number setting.

MRS = 000

[JOB#253]

CONSECUTIVE NO. SETTING

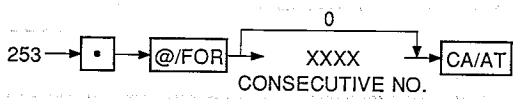

XXXX = 0 ~ 9999

A 4-digit integer or smaller one must be entered for the consecutive no. setting.

MRS = 0000

[JOB#286]

STAKED REPORT

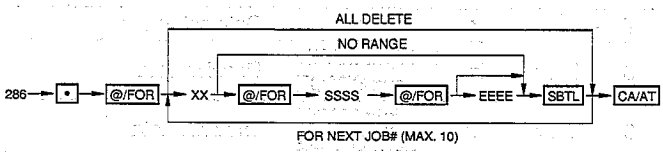

XX : JOB#
SSSS : Start code
EEEE : End code

JOB#	Report name	Type
00	GENERAL	—
10	DEPT	—
20	PLU	RANGE
30	TRANSACTION	—
31	CID	—
50	ALL CASHIER	—
60	HOURLY	—
70	DAILY NET	—
04	GENERAL (GT reset)	—
13	DEPT ALL GROUP	—

- The following reports are inline job reports.

JOB#	Report name	Type
05	SYSTEM GENERAL	—
15	SYSTEM DEPT	—
25	SYSTEM PLU	RANGE
35	SYSTEM TRANS.	—
36	SYSTEM CID	—
55	SYSTEM ALL CSR.	—
65	SYSTEM HOURLY	—
75	SYSTEM DAILY NET	—
09	SYSTEM GENERAL (GT report)	—
18	SYSTEM dept all group	—

MRS = All delete

[JOB#270]

PROGRAMMING OF THE TIME INTERVAL FOR THE TILL TIMER

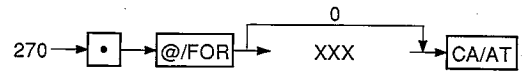

x: 0~255 sec

MRS = 000

[JOB#271]

Gallon discount amount programming

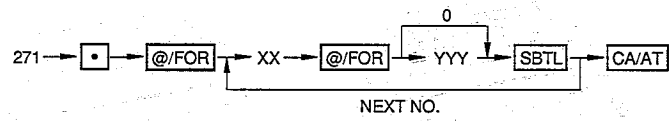

XX: Function number
YYY: Discount amount (0.0 ~ 99.9 cent)

Function No.	Function	Entry system/range
48	CA1	0 ~ 99.9
49	CA2	
63	CHK	
53	CHR1	
59	CHR2	
60	CHR3	
61	CHR4	
62	CHR5	

[JOB#280, 281, 282]

SECRET CODE PROGRAMMING

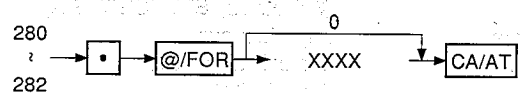

#280: PGM1 MODE
#281: Z1 MODE
#282: Z2 MODE

IF "0" IS ENTERED, "COMPULSORY SECRET CODE ENTRY" IS CANCELED.

MRS = 0000

[JOB#110]

Department programming reading

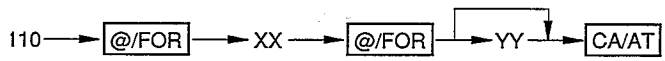

[JOB#120]

PLU programming reading

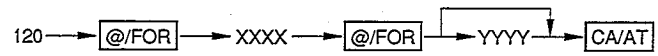

10. Down Load Function

10-1. General

As one of ER-2595 functions, it is possible to transfer RAM data between the ER-2595s, which can be utilized to save RAM data at a time of machine servicing.
The cable (QCNW-6952RCZZ) must be used to connect two ER-2910's.

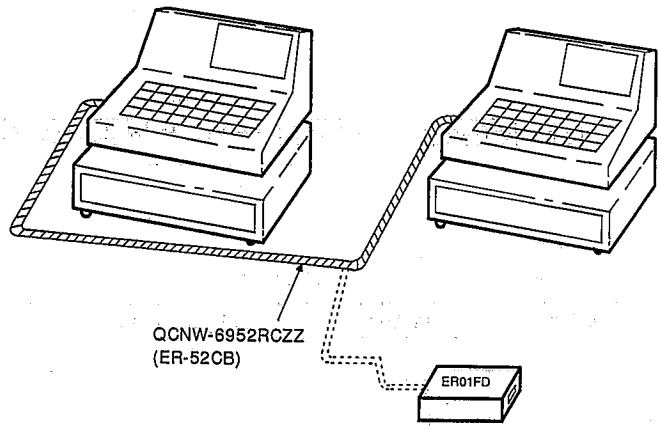

Fig. 7-1

10-2. SIO interface specification

1) Operation mode: Half-duplex
2) Line configuration: Direct connect
3) Data rate: 9600, 4800, 2400, 1200, 600, 300BPS (Selected by SRV JOB#903-A)
4) Sync mode: Asynchronous
5) Checking: Vertical parity (odd)
6) Code: 7 bits (ASCII)
7) Bit sequence: LSB first
8) Line level: TTL level
9) Data format: Fig. 7-2

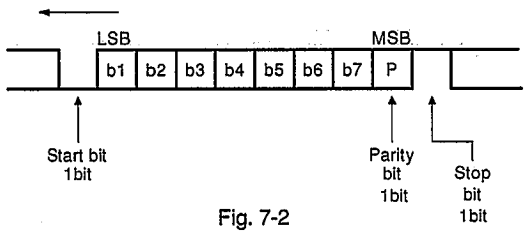

Fig. 7-2

10-3. Location of connector pins

QCNW-6952RCZZ (ER-52CB)

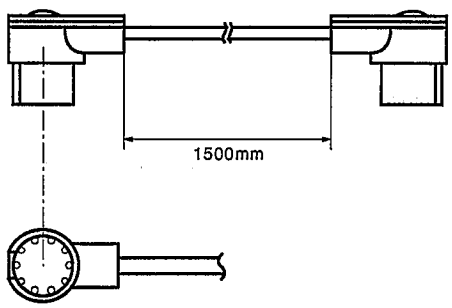

Fig. 7-3

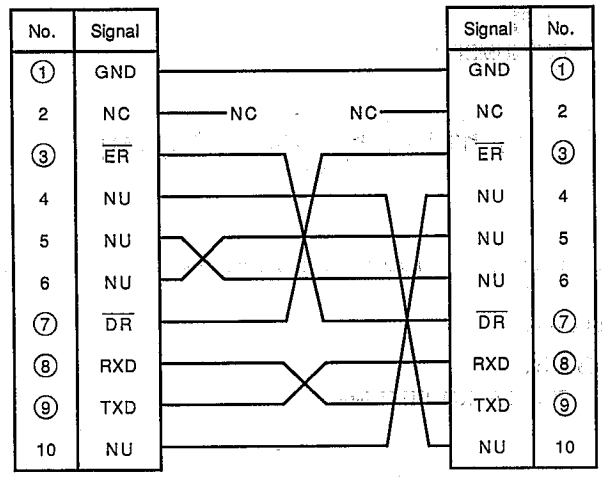

Interfacing signals

Pin No.	Signal name	In/Out	On level	Description
1	GND	—	—	Signal ground
2	NC	—	—	Not connected
3	$\overline{ER}$	Out	Low	Equipment ready (power on)
4	—	—	—	—
5	—	—	—	—
6	—	—	—	—
7	$\overline{DR}$	In	Low	Data set ready
8	RXD	In	High: MARK Low: SPACE	Receive data
9	TXD	Out	High: MARK Low: SPACE	Transmit data
10	—	—	—	—

This cable is identical to the one used for the ER3100 etc. But, it has to be noted that different signals are used.

10-4. Application specification

The following service (SRV) modes are available for the serial data transfer of the ER-2595.

1) Data transmit (Source side)

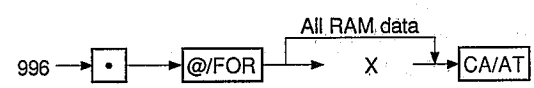

2) Data receive (Target)

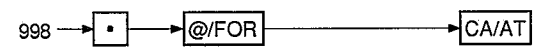

X = 1: Data in the RAM area

10-5. Transmission protocol

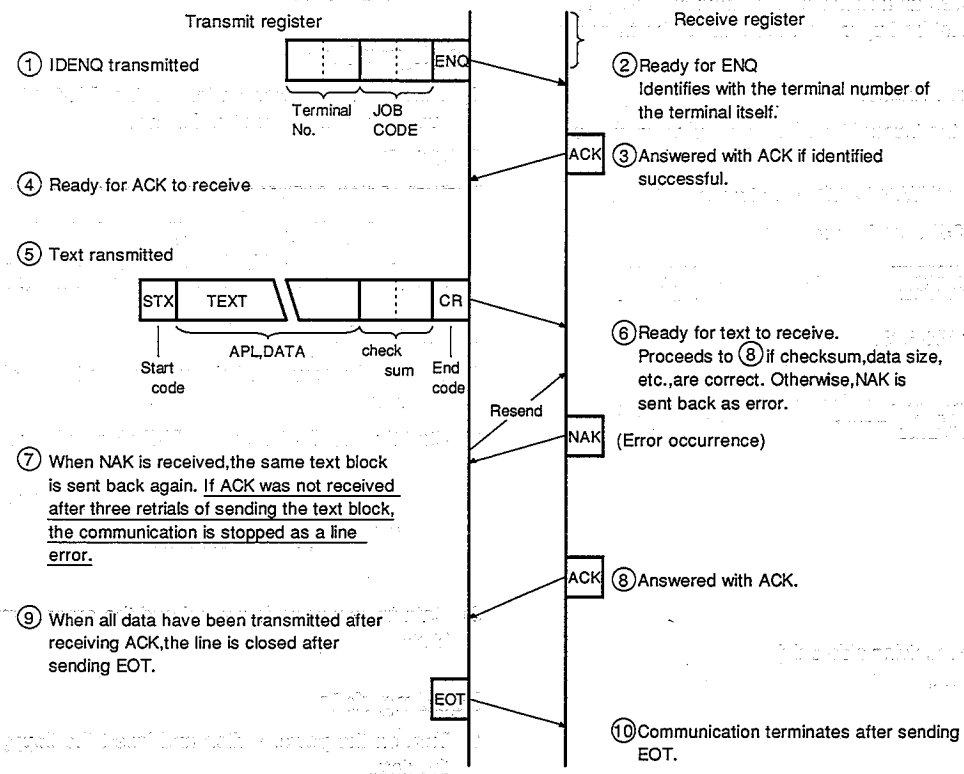

Fig. 7-4

10-6. Data format

One byte of the RAM data to be transmitted is divided into high order four bits and low order four bits and converted into ASCII code or BCD.
Then, they are transmitted in the following format as memory image.
Status is transmitted as a block.

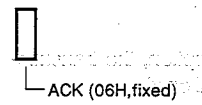

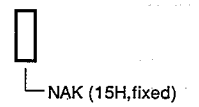

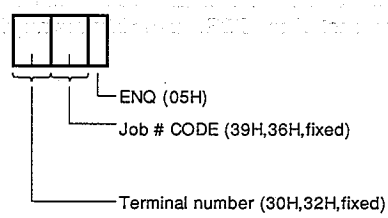

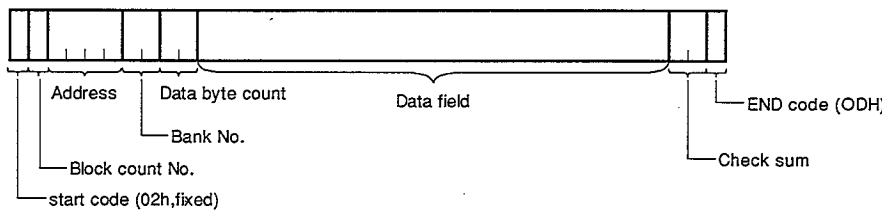

- Start code: STX 02H, fixed
- Block count No.: Ring count method
  (30H → 31H → 32H ..... 39H)
- Address: Represents the memory top address of the data to be transmitted in the ASCII code.
- Data byte count: Indicates the number of effective data within the data field.
- Data field: Memory contents are converted into ASCII code and sent. Fixed to 128 bytes.
- Check sum
- End code: CR (0DH, fixed)

10-7. Operational method

1) To set one unit of ER2595 as a receiver. The memory size (RAM capacity) of this unit must be larger than the unit on the transmit side.
2) Master reset the receiver ER2595.
3) Match the baud rate of the transmitter with the receiver using Job #903 in the SRV mode.
4) Connect loader cable (QCNW-6952RCZZ) between ER2595.
5) To set the receiving ER2595 ready to receive.

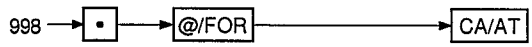

6) To start the transmitting ER2595.

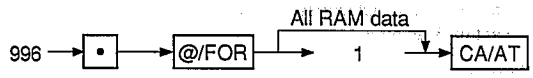

7) Transmission starts.

Description of error status

1: Instruction error
2: Line error
3: Parity error
4: Check sum error
5: Data size error (at the receiving side only)
7: Hardware error (over run,
8: Power off error
10: Time out error
11: Protect error
12: Block sequence error

10-8. Error print

When an error is met during transmission or reception, the transmission terminates with the following printed. (Journal only)

Transmited error: E - 02 – 996 –

↑ error code ↑ Job No. ↑ 1 or brank

Received error: E - 02 – 998 –

Transmited: – 996 –

↑ 1 or brank

Received: – 998 –

10-9. Saving/loading of data to/from the FD unit

Configuration

1) Turn off the power switch of the ER-01FD, and set the DIP switches of the FD unit as follows:

ER-01FD [9600BPS]

DS-1								DS-2			
1	2	3	4	5	6	7	8	1	2	3	4
OFF	ON	OFF	ON	ON	OFF	OFF	OFF	OFF	ON	OFF	OFF

Saving data

1) Turn on the power switch and insert a floppy disk which has been for method.
2) Start the SEND JOB on the ECR side as follows:

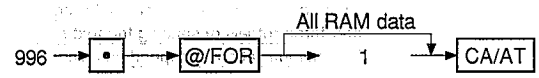

3) Data transmission is started and the green lamp on the ER-01FD blinks.

Loading data

1) Turn on the power switch and insert the floppy disk which stores the data.
2) Start the RECEIVE JOB on the ECR side as follows:

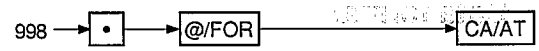

3) Press the [SEND] key on the FD unit.
4) Data transmission is started and the green lamp on the ER-01/02FD blinks.

Note: In the ER-01FD mode, only one file can be made in one disk. When, therefore, transmitting DEPT preset, PLU preset, and other preset of one ECR, three disks are required.

11. TEST FUNCTIONS

11-1. General

This is the ER-2595 internal test program which is intended to simplify the machine test procedures for the line inspection and field servicing.
The program is stored in an external ROM which can be executed by the CPU (HD63A03X) under the following conditions.

a. The logic drive power supplies (+5V, VRAM VCKDC), +19V line, and the display drive power supply are normal.

b. The CPU I/O signal lines and the CPU internal logic are functioning normal with the entire CKDCIII (HD404708 A73FS), the MPC2 (LZ93M19), the address and data buses, the common ROM and the RAM being normal.

11-2. Operational procedure

The diagnostic program can be initiated in the SRV mode after the following key operation.

Enter a three-digit number → CA/AT (Device test)
3 → SBTL (Journal feed for printer speed adjustment)

Since this diagnostic program branches from the application in the SRV mode, it is a prerequisite that the key entries are correct with the ROM and RAM operating properly.
Do the master reset after power was first turned on.
Do the program reset after any new option unit was installed on the machine operating in normal conditions.
After the master reset or program reset was done, check the journal printout.

Master reset: Change the switch from SRV2 mode to SRV1 mode while holding down the journal feed key.

Journal printout: | A ------ |

Program reset: Change the switch from SRV' mode to SRV mode.

Journal printout: | B ------ |

SRV mode display:

Main display: [0.00]

Popup display: [0.00] * TAB 2

11-3. Device test

Each device test program is initiated by doing the following operation in the SRV mode.

Enter code → [CA/AT]

1. Test command list

Code	Description
100	Display test-1
101	Key, Cashier, and Receipt switch position code test display test
102	UCR-910D printer test-1
104	Keyboard test
105	Mode switch test
106	Validation sensor and Journal paper near end sensor test
108	Calendar clock test
110	Drawer-1 open and sensor test (standard drawer)
111	Drawer-2 open and sensor test (option drawer)
112	Drawer-3 open and sensor test (option drawer)
113	Drawer-4 open and sensor test (option drawer)
114	UCR-910D printer test-2
116	Display test-2
117	SiO test-1
118	SiO test-2
120	Standard RAM test
130	Standard ROM test
200	OPTION RAM test (ER-01RA)
201	OPTION RAM test (ER-02RA)
400	Option ROM test (ER-25RM: BANK40H~ 43H)

2. Device test

[1] Display test-1

① Key operation

100 → [CA/AT]

② Description
The display shows as shown next:

Operator display:

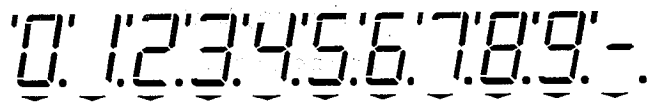

Customer display:

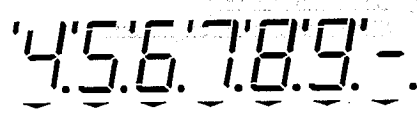

③ Check the following.

1. The display is showing correctly.
2. The display is free from blur, partial omission, unevenness, etc.

④ Termination
Any key depression terminates the test with the termination printout produced.

| 100 |

Termination printout

[2] Key, Clerk, and Receipt switch position code test

① Key operation

101 → CA/AT

② Description

Key position, receipt switch position, and cashier key position are shown on the display with their codes used.

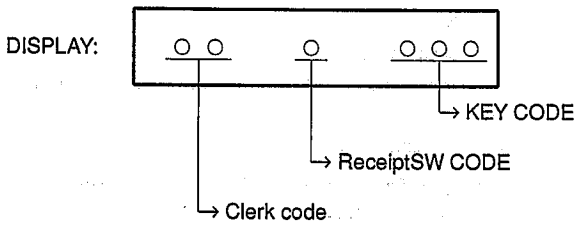

③ Check the following.

Change the switch and key positions to check that the display is showing correct.

		Stay down keys
Cashier code	:	00 (OFF)
		01 (Clerk A)
		02 (Clerk B)
		04 (Clerk D)
		08 (Clerk E)
Receipt switch code	:	0 (ON)
		1 (OFF)
KEY CODE	:	(Overstrike, invalid key depression)
		000

NOTE: The soft code is used to display the key code (representing the position code in decimal).

④ Termination

Change the mode key position (rotate to any position other than SRV1 and SRV2 mode) to terminate the test.

| 101 |

Termination printout

Key position code table

[3] UCR-910D printer test-1

① Key operation

102 → CA/AT

② Description

The following actions take place regardless of the receipt switch position (ON or OFF).

1) Receipt printout
2) Journal/receipt single linefeed
3) Journal printout
4) Receipt printout (stamping and linefeeds)

12	11	10	9	8	7	6	5	4	3	2	1
#	—	$	0	1	2	3	4	5	6	TX	RA

Receipt printout

12	11	10	9	8	7	6	5	4	3	2	1
T1/T2	PL	–	$	0	1	2	3	4	5	LB	TL

Journal printout

③ Check the following.

1. Printout
   Must be free from missing character and print error.
2. Check the stamp printout.

④ Termination

The program terminates automatically without producing the termination printout.

[4] Keyboard test

① Key operation

104 → CA/AT

② Description

The program is intended to test the ER-2595 keyboard.
Press keys on the keyboard in the order given in Fig.1. When all key codes are entered correctly, the program terminates with a termination printout produced indicating normal completion of the test. If an error was met in a course of the test (a wrong key entry), an error printout will be produced upon the occurrence of the error. When the test is interrupted, no termination printout will be produced.
This test can be used for the standard layout keyboard only.

③ Check the following.

Check the termination printout.

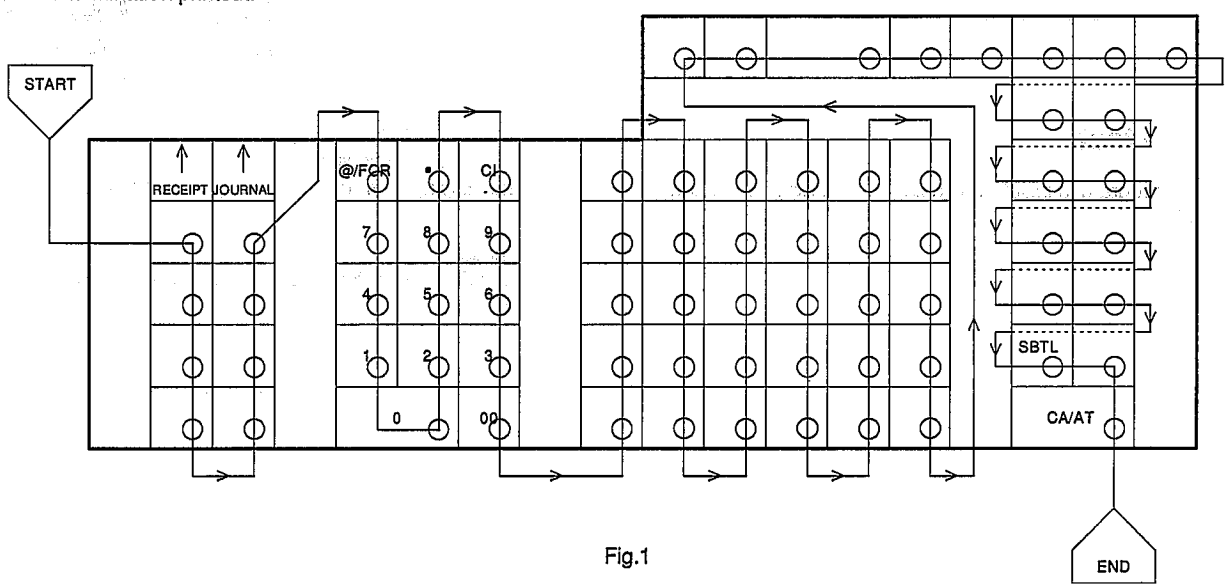

Fig.1

④ Termination
Press the [CA/AT] key to terminate the program.

104		E -- XXX 104
Termination printout		Error printout

XXX: Position key code that caused the error

[5] Mode switch test

① Key operation

105 → [CA/AT]

② Description
This program is intended to test the mode switch. Change the mode switch position in the following order.

Initial state Mode: SRV1 mode

Mode check
Starting from the SRV1 mode, change the mode in the following order to check the mode switch action. The display shows the position code of the selected mode.

DISPLAY: [x] x: 0 – 7, E, F

Mode	:	SRV	PGM2	PGM1	OFF	OP-X/Z	REG
x	:	0	1	2	E	3	4
		SRV			Z1/X2/Z2	X1	MGR
		0			7	6	5

(x: E – Midway key position, F – Multiple errors)

If any mode code that does not match the above sequence is found or if any key is pressed, an error printout will be immediately produced and the program terminates, except when the mode switch is in on its midway position. Make sure to set the mode switch properly in its position. After the mode is set to Z1/X2/Z2, there is no need of rotating the switch slowly as the test is not performed until returned to the SRV mode, though the code is displayed.

③ Check the following.
Check the display and the termination printout.

④ Termination
The program terminate upon successful completion of the test.
Any key depression or error occurrence terminates the test.

105		E----- 105
Normal termination printout		Error printout (including when any key is pressed to cancel the test)

[6] Validation sensor and near end sensor test

① Key operation

106 → [CA/AT]

② Description
The program is intended to test the status indication for the validation sensor and the near end sensor.

③ The on/off action of the validation sensor and the near end sensor is tested with the status displayed.

DISPLAY: [x y] x: Validation sensor status
y: Near end sensor status

Display	x/y	Status
VDS	0	Validation card not detected
	C	Validation card detected
NES	0	Journal paper roll near end detected
	C	Journal paper roll near end not detected

NOTE: VDS: Validation sensor (option)
NES: Near end sensor (option)

④ Termination
Any key depression terminates the test with the termination printout produced.

106
Termination printout

[7] Calendar clock test

① Key operation

108 → [CA/AT]

② Description
This program is intended to test the timer.
Have the timer displayed after setting the test time data. The time to be set is 23 hours 59 minutes in the 24- hour system.

7SEG-DISPLAY: [23 – 59] → [00 – 00]

③ Check the following.

1. Check the time data on the time display.
2. Check that "–" in the time display is blinking (on/off at 500ms intervals).

④ Termination
Any key depression terminates the test with the termination printout produced.

108
Termination printout

NOTE: Execution of this test will clear the time data setting (minute, hour, day of week, day, month, year). Reset the time.

[8] Drawer open sensor test

① Key operation

110 ~ 113 → [CA/AT]

② Description
When the specified drawer is opened, the drawer open sensor status is given.
The standard drawer is not equipped with the drawer open sensor.
If the sensor is not avilable, "C" is always displayed.

Drawer is opened "O" displayed
Drawer is closed "C" displayed

110: Drawer-1 Standard
111: Drawer-2 Option
112: Drawer-3 Option
113: Drawer-4 Option

③ Check the following.

1. Only the specified drawer is opened.
2. Check the open and close status of the drawer.

④ Termination
Any key depression terminates the test with the termination printout produced.

11X	X: 0 – 3
Termination printout	

[9] CR-910D printer test-2

① Key operation

114 → [CA/AT]

② Description

This program is intended for the printer aging test. The print lines 1 to 13 are repeated. As any key depression is interrogated after printing a line, encounter of any key depression causes to terminate the test. Otherwise, the test continues.

	12	11	10	9	8	7	6	5	4	3	2	1
1)	#	–	$	0	1	2	3	4	5	6	TX	RA
2)	–	$	0	1	2	3	4	5	6	7	RF	PO
3)	$	0	1	2	3	4	5	6	7	8	CP	VD
4)	A	1	2	3	4	5	6	7	8	9	CA	TD
5)	B	2	3	4	5	6	7	8	9	DC	CK	CG
6)	D	3	4	5	6	7	8	9	.	X	CH	FS
7)	E	4	5	6	7	8	9	.	–	Z	FS	1
8)	H	5	6	7	8	9	.	–	$	0	%	2
9)	P	6	7	8	9	.	–	$	0	1	⊖	3
10)	Tx	7	8	9	No	–	$	0	1	2	@	4
11)	T^{2}_{X}	8	9	NS	–	$	0	1	2	3	Q	5
12)	T	9	GT	–	$	0	1	2	3	4	KG	ST
13)	T^{1}_{2}	PL	–	$	0	1	2	3	4	5	LB	TL
1)	#	–	$	0	1	2	3	4	5	6	TX	RA

③ Check the following.

1. Check the print quality.

④ Termination

Press any key to terminate the test.
Both receipt and journal printouts

NOTE: Printer wheel will be changed ("H" → "@": USA, CANADA/ "$" → "★": except USA, CANADA) from 90' Aug production

[10] Display test-2

① Key operation

116 → [CA/AT]

② Description

The display is checked one at a time and steps 1) thru 4) are repeated.

Check 1: Displays same characters on all columns (0 to 9, -).

Check 2: Shifts ("8" digit one to digit 11)

Check 3: Indicator shift (digit one to digit 11)

Check 4: Decimal point shift (digit one to digit 11)

The display stops when any key is pressed. The checking resumes when any key is depressed again.

③ Check the following.

1. The display is showing correctly.
2. The display is free from blur, partial omission, unevenness, etc.

④ Termination

When the mode key is set to any position other than the SRV mode, the program terminates with the termination printout produced.

| 116 |

Termination printout

[11] SiO test-1

① Key operation (Check that the service tool is connected)

117 → [CA/AT]

② Description

A loopback test is performed using the service tool (UKOG-6651RCZZ).

Check 1: ER-DR check (ER level check)
Check 2: TDX-RDX check (9600PBS)

③ Check the following.

Check the termination printout.

| 117 | | E ---- X 117 |

Normal termination printout

X = 2: Check 1 error
3: Transmit/receive data matching error
4: Time-out error
6: Hardware error (overrun, framing error)
7: POFF

④ Termination

After the checking has been complete, the test terminates with the termination printout produced.

[12] SiO test-2

① Key operation

118 → [CA/AT]

② Description

A Loop back connector is necessary
Data is ontinuously transmitted.
Transmission rate: 9600PBS
Data transmission interval (for one data item): Approx. 1msec
This test continues until any key is pressed.

③ Termination

Any key depression terminates the test with the termination printout produced.

| 118 | | E ---- X 118 |

Normal termination printout

X = 2: Check 1 error
3: Transmit/receive data matching error
4: Time-out error
6: Hardware error (overrun, framing error)
7: POFF

[13] Standard RAM test

① Key operation

120 → [CA/AT]

② Description

The following are checked with respect to the common RAM area and the bank RAM area of the standard RAM.

1. Checking the common area
   The read/write tests PASS1 ~ 3 are carried out for the general working area (256 bytes) of the common RAM.

   PASS1: Writes 55h in entire check area.
   (55H write test (NOTE 1) is carried out to verify correct writing of the test code 55h)

   PASS2: Reads the test code 55h and replaces it with AAH for every byte of the check area.
   (At the same time the test code 55H is read (NOTE 2), the test code AAH is written and verified (NOTE 1).)

   PASS3: Reads the test code AAH for every byte and replaces it with 00h.
   (At the same time AAH is read (NOTE 2), 00H is written and verified (NOTE 1).)

2. Checking the bank area
   With this test, the test data are written and read for every byte, the test data are written and read at specific locations, and the bank selection is tested.

1) Byte-by-byte read/write test (device test)
The following is tested for the banks 2 and 3 (addresses 2000-2FFF).

i) Data save

ii) 55H write test (NOTE 1)
(Checks correct writing of the test data)

iii) AAH write test (NOTE 1)
(- ditto -)

iv) Data restore
The above tests i) to iv) are performed on a byte-by-byte basis.

2) Read/write test at check points
The following are performed at the test addresses in the bank 2 listed below.

PASS1: At the moment the data is saved at the test address, the test code 55H is written and verified (NOTE 1).

(Write test: Proper writing of the test data is checked and the written data is compared with the data in the test address.)

PASS2: At the same moment the test data 55H written in PASS 1 is read to test (NOTE 2), it is replaced with AAH and verified (NOTE 1).
(Read test: Comparison of the data at the test address with the test data)

PASS3: At the same time the test data AAH written in PASS2 is read to test (NOTE 2), the data saved at 1) is restored.

NOTE 1: Error printout-1 is produced when an error is met.

NOTE 2: Error printout-2 is produced when an error is met.

check address)

address	address bus											
	11	10	9	8	7	6	5	4	3	2	1	0
2000	0	0	0	0	0	0	0	0	0	0	0	0
2001	0	0	0	0	0	0	0	0	0	0	0	1
2002	0	0	0	0	0	0	0	0	0	0	1	0
2004	0	0	0	0	0	0	0	0	0	1	0	0
2008	0	0	0	0	0	0	0	0	1	0	0	0
2010	0	0	0	0	0	0	0	1	0	0	0	0
2020	0	0	0	0	0	0	1	0	0	0	0	0
2040	0	0	0	0	0	1	0	0	0	0	0	0
2080	0	0	0	0	1	0	0	0	0	0	0	0
2100	0	0	0	1	0	0	0	0	0	0	0	0
2200	0	0	1	0	0	0	0	0	0	0	0	0
2400	0	1	0	0	0	0	0	0	0	0	0	0
2800	1	0	0	0	0	0	0	0	0	0	0	0

3) Bank select test
The following tests are performed at the bank select test address (2000H) in banks 2 and 3.

PASS1: At the moment the data is saved at the test address, the test code 55H is written and verified (NOTE 1).

PASS2: At the same moment the test data 55H written in PASS 1 is read to test (NOTE 2), it is replaced with AAH and verified (NOTE 1).

PASS3: At the same time the test data AAH written in PASS2 is read to test (NOTE 2), the data saved in PASS1 is restored.

NOTE 1: Error printout-1 is produced when an error is met.

NOTE 2: Error printout-3 is produced when an error is met.

③ Check the following.
Check the termination printout.

④ Termination
The test is terminated with the termination printout produced.

Termination printout:

Normal termination printout		120
Error termination printout	E -----	120

Error status printout

Error printout-1	E1 --- 1	120
Error printout-2	E2 --- 1	120
Error printout-3	E3 --- 1	120

1: Standard RAM

NOTE: When an error occures, an error status print out and an error termination printout are produced to terminate the test.

[14] Standard ROM test

① Key operation

130 → [CA/AT]

② Description
A sum check is performed for the standard ROM (8000H ~ FFFFH and BANK 2, 3: 4000H ~ 7FFFH).

③ Check the following.
Check the termination printout.

④ Termination
The test is terminated with the termination printout produced.

Normal termination printout		130
Error termination printout	E -- XXXX	130

XXXX: ROM version No.

[14] BANK RAM TEST (ER-01RA/ER-02RA)

① Key operation

200 → [CA/AT] (ER-01RA)

201 → [CA/AT] (ER-02RA)

② Description
Tests are performed for the memory area that corresponds to each option RAM.

200: ER-01RA: check bank 2, 3, 40H ~ 47H
201: ER-02RA: check bank 2, 3, 40H ~ 5FH

With this test, the test data are written and read at every byte, the test data written are and read at specific locations, and the bank selection is tested.

1) Byte-by-byte read/write test (device test)
The following is tested for all banks (addresses 2000 ~ 2FFF).

i) Data save

ii) 55H write test (NOTE 1)
(Checks correct writing of the test data)

iii) AAH write test (NOTE 1)
(- ditto -)

iv) Data restore
The above tests i) to iv) are performed on a byte-by-byte basis.

2) Read/write test at check points
The following are performed at the test addresses in banks 2 and 40 listed below.

PASS1: At the moment the data is saved at the test address, the test code 55H is written and verified (NOTE 1).

(Write test: Checks proper writing of the test data and compares the written data with the data in the test address.)

PASS2: At the same moment the test data 55H written in PASS 1 is read to test (NOTE 2), it is replaced with AAH and verified (NOTE 1).

(Read test: Comparison of the data at the test address with the test data)

PASS3: At the same time the test data AAH written in PASS2 is read to test (NOTE 2), the data saved in PASS1 is restored.

NOTE 1: Error printout-1 is produced when an error is met.

NOTE 2: Error printout-2 is produced when an error is met.

check address)

address	address bus											
	11	10	9	8	7	6	5	4	3	2	1	0
2000	0	0	0	0	0	0	0	0	0	0	0	0
2001	0	0	0	0	0	0	0	0	0	0	0	1
2002	0	0	0	0	0	0	0	0	0	0	1	0
2004	0	0	0	0	0	0	0	0	0	1	0	0
2008	0	0	0	0	0	0	0	0	1	0	0	0
2010	0	0	0	0	0	0	0	1	0	0	0	0
2020	0	0	0	0	0	0	1	0	0	0	0	0
2040	0	0	0	0	0	1	0	0	0	0	0	0
2080	0	0	0	0	1	0	0	0	0	0	0	0
2100	0	0	0	1	0	0	0	0	0	0	0	0
2200	0	0	1	0	0	0	0	0	0	0	0	0
2400	0	1	0	0	0	0	0	0	0	0	0	0
2800	1	0	0	0	0	0	0	0	0	0	0	0

3) Bank select test
The following tests are performed at the bank select test address (2000H) for banks 2, 3, 40, 41, 42, 44, 48, and 50.

PASS1: At the moment the data is saved at the test address, the test code 55H is written and verified (NOTE 1).

PASS2: At the same moment the test data 55H written in PASS 1 is read to test (NOTE 2), it is replaced with AAH and verified (NOTE 1).

PASS3: At the same time the test data AAH written in PASS2 is read to test (NOTE 2), the data saved in PASS1 is restored.

NOTE 1: Error printout-1 is produced when an error is met.

NOTE 2: Error printout-3 is produced when an error is met.

③ Check the following.
Check the termination printout.

④ Termination
The test is terminated with the termination printout produced.

Termination printout:

Normal termination		
Normal termination printout:		200
Error termination		
Error status printout:		
Error printout-1	E1 --- Y	20X
Error printout-2	E1 --- Y	20X
Error printout-3	E3 --- Y	20X
Error termination printout:	E -----	20X

Y: RAM#NO. (2, 3, 4)
X: 0 or 1

NOTE:
- When an error occurres, an error status printout is produced, after which the test is resumed. Once an error has occurred in the RAM, an error status printout will not be produced if an error occurs again during the execution of the test. If an error occurs, an error printout will be produced after completion of the test.
- When an optional expansion memory is not installed, the error printout-1 will be made for RAMs Nos.3 and 4.
- If the ER-02RA test (JOB#201) is carried out when the ER-01RA is installed, the error printout-1 will be produced for the RAM No.3.

RAM#NO. 1: Standard RAM (Only Bank serect check)
2: Option RAM (ER-01RA)
3: Option RAM (ER-02RA)

[15] OPTION ROM TEST (ROM BANK 40H ~ 43H, ADDRESS 4000H ~ 7FFFH)

① Key operation
400 → [CA/AT]

② Description
The sum check is performed for the option ROM.

③ Check the following.
Check the termination or error printout.

④ Termination
The test terminates with the termination printout produced.

Termination printout:

Normal termination printout	XXXX	400
Error printout	E -- XXXX	400

XXXX: ROM version No.

11-4. Printer speed adjusting work (See page 10)

① Key operation
Enter the following in the SRV mode.

3 → [SBTL]

② Description
Only the journal is fed continuously for adjustment of the printer speed at the work line. (One line feed in one print cycle)

③ Termination
Any key depression terminates the test without producing the termination printout.

12. Circuit Description

12-1. Circuit block diagram

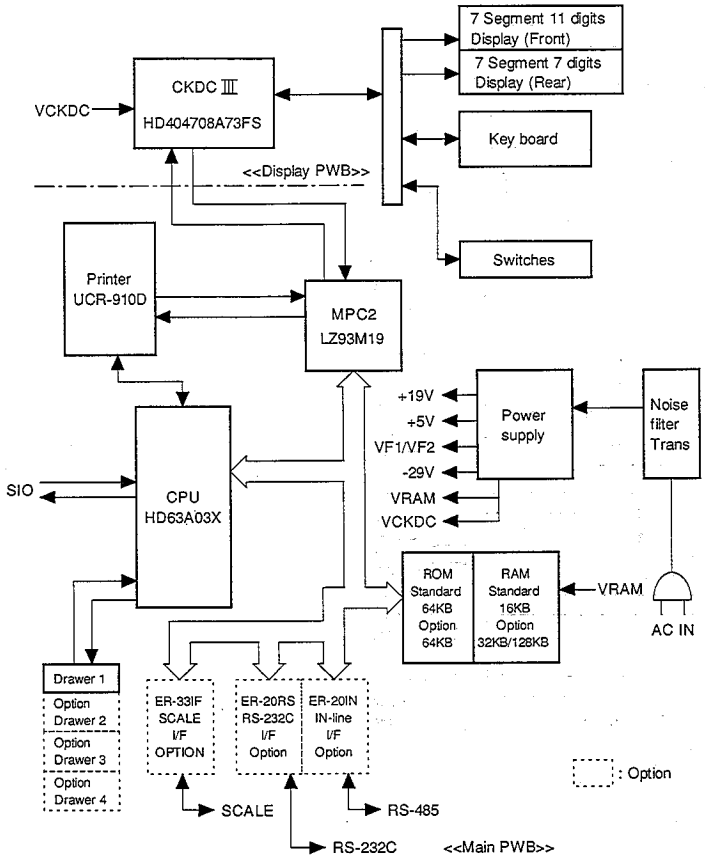

Fig. 9-1

12-2. CPU (HD63A03X) description

The HD63A03X is a high performance 8-bit CMOS micro-processor (MCU) which incorporates enhanced internal function and has the command codes compatible with the HD6301V1.

Apart from the CPU, the HD63A03X incorporates the 192-byte RAM, 16-bit programmable timer, 8-bit reload timer, serial communication interface, and 53 parallel I/O pins. In addition, external bus release and low speed memory accessing are permitted when the system is expanded as it has the halt and memory ready functions.

1) Features

The HD63A03X has the following features:

- Command set compatible with the HD6301V1.
- 192-byte RAM
- 53 parallel I/O pins
  24 input/output pins (ports, 2, 3, 6)
  21 output pins (ports, 1, 4, 7)
  8 input pins (port 8)
- Permits driving of darlington transistor (ports, 2, 6)
- 16-bit programmable timer
  Input capture register x 1
  Free running counter x 1
  Output compare register x 1
- 8-bit reload timer
  External event counter
  Square waveform generator
- Serial communication interface (SCI)
  Async mode/clock sync mode
  3 kinds transfer formats (async mode)
  6 kind clock source
- Memory ready function for accessing of low speed memory
- Halt function
- Error detect function (address error, op code error)
- Interrupt cause ... 3 externals and 7 internals.
- Operation mode ... Mode 1 (expansion mode)
- Maximum 64KB address space
- Low power dissipation mode
  Sleep mode
  Standby mode
- Minimum command execution time ... 0.5 us (f=2.0MHz)
- Wide operation range
  VCC = 3 to 6V (f=0.1 to 0.5MHz)
  VCC = 5V±10%

2) Pin configuration

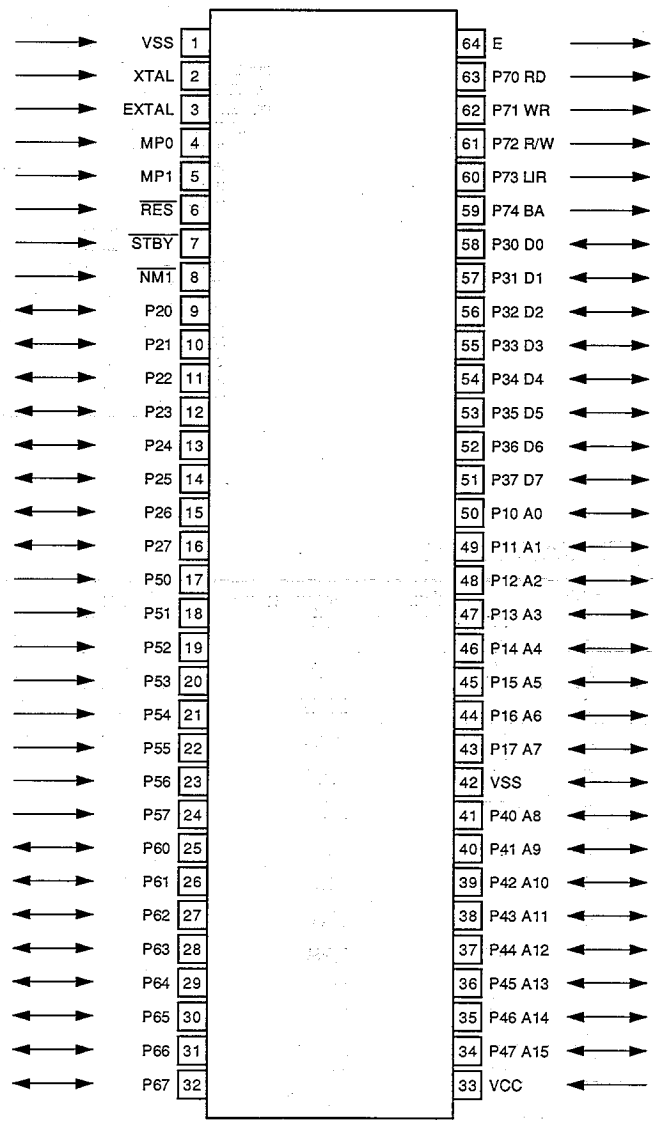

HD63A03X pin configuration

Fig. 9-2

3) Block diagram (HD63A03X)

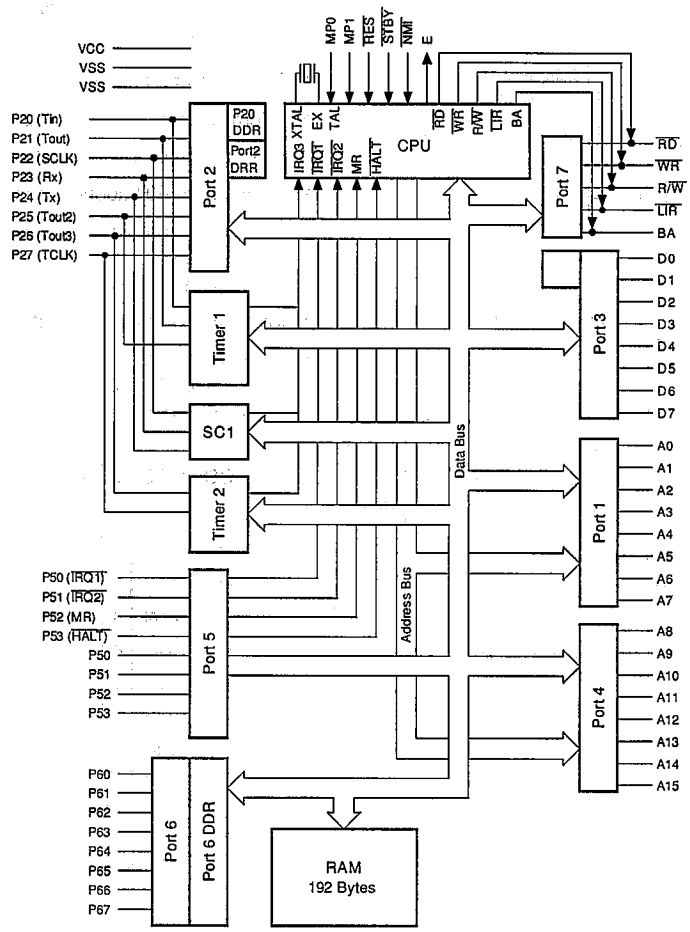

Fig. 9-3

1) Pin Assignment

Pin No.	Symbol	Signal name	In/Out	Function
1	VSS	GND	In	GND connected
2	XTAL	XTAL	In	4.91 MHz crystal oscillator connection
3	EXTAL	EXTAL	In	4.91 MHz crystal oscillator connection
4	MP0	VCC	In	CPU mode-1 selection (+5V connected)
5	MP1	GND	In	CPU mode-1 selection (GND connected)
6	$\overline{RES}$	$\overline{RESET}$	In	Reset input active low
7	$\overline{STBY}$	VCC	In	Standby input active low (Not used)
8	$\overline{NMI}$	VCC	In	(Not used) Non maskable interrupt
9	P20	JFS	Out	Journal paper feed signal
10	P21	RFS	Out	Receipt paper feed signal
11	P22	MTD	Out	Print motor drive signal
12	P23	RXD	In	SIO receive data
13	P24	TXD	Out	SIO transmit data
14	P25	STMPS	Out	Stamp drive signal
15	P26	—	Out	Not used
16	P27	$\overline{STOP}$	Out	System reset request signal
17	$\overline{IRQ1}$	$\overline{POFF}$	In	Power off signal
18	$\overline{IRQ2}$	$\overline{MPCRQ}$	In	MPC2 interrupt request

Pin No.	Symbol	Signal name	In/Out	Function
19	MR	VCC	In	Memory ready (Not used)
20	$\overline{HALT}$	VCC	In	Not used
21	P54	$\overline{VP}$	In	Validation paper sense signal
22	P55	$\overline{NE}$	In	Paper near end sense signal
23	P56	$\overline{DTR}$	In	SIO DR signal
24	P57	DS	In	Drawer open signal sense
25	P60	$\overline{DR0}$	Out	Drawer 1 drive signal (standard)
26	P61	$\overline{DR1}$	Out	Drawer 2 drive signal (option)
27	P62	$\overline{DR2}$	Out	Drawer 3 drive signal (option)
28	P63	$\overline{DR3}$	Out	Drawer 4 drive signal (option)
29	P64	ERS	Out	SIO ER signal
30	P65	(PX1)	Out	Not used
31	P66	(PX2)	Out	Not used
32	P67		Out	Not used
33	VCC	VCC	In	+5V
34	A15	A15	Out	High order address output (High order address bus A15~A8), A15
35	A14	A14	Out	High order address output (High order address bus A15~A8), A14
36	A13	A13	Out	High order address output (High order address bus A15~A8), A13
37	A12	A12	Out	High order address output (High order address bus A15~A8), A12
38	A11	A11	Out	High order address output (High order address bus A15~A8), A11
39	A10	A10	Out	High order address output (High order address bus A15~A8), A10
40	A9	A9	Out	High order address output (High order address bus A15~A8), A9
41	A8	A8	Out	High order address output (High order address bus A15~A8), A8
42	VSS	GND	In	GND connected
43	A7	A7	Out	Low order address output (Low order address bus A7~A0), A7
44	A6	A6	Out	Low order address output (Low order address bus A7~A0), A6
45	A5	A5	Out	Low order address output (Low order address bus A7~A0), A5
46	A4	A4	Out	Low order address output (Low order address bus A7~A0), A4
47	A3	A3	Out	Low order address output (Low order address bus A7~A0), A3
48	A2	A2	Out	Low order address output (Low order address bus A7~A0), A2
49	A1	A1	Out	Low order address output (Low order address bus A7~A0), A1
50	A0	A0	Out	Low order address output (Low order address bus A7~A0), A0
51	D7	D7	In/Out	Data bus, D7
52	D6	D6	In/Out	Data bus, D6
53	D5	D5	In/Out	Data bus, D5
54	D4	D4	In/Out	Data bus, D4
55	D3	D3	In/Out	Data bus, D3
56	D2	D2	In/Out	Data bus, D2
57	D1	D1	In/Out	Data bus, D1
58	D0	D0	In/Out	Data bus, D0
59	BA	—	Out	Indicates release of the address data bus line in the halt state (Not used)
60	LIR	—	Out	Data on the data bus are loaded in the CPU command register (Not used)
61	R/$\overline{W}$	R/$\overline{W}$	Out	Read/write signal; Low = Write, High = Read
62	$\overline{WR}$	$\overline{WR}$	Out	Write signal
63	$\overline{RD}$	$\overline{RD}$	Out	Read signal
64	E	E	Out	External system clock (f = 1.2288MHz)

12-3. MPC2 (LZ93M19) description

(1) General

The LZ93M19 is a custom gate array designed to support the HD63A03X main CPU peripheral circuits.

Its major features include memory mapping, CKDCIII interfacing, general-purpose I/O ports, and SSP circuit. (The SSP circuit is not used for the ER-2595)

- Features

1) Provides an 8-bit serial interface to permit interfacing with a 4-bit single-chip microcomputer (CKDCIII).
2) Internal interrupt control circuit
3) Memory expansion
   Bank address register A (8-bit):
   Usually used for RAM bank
   Bank address register B (8-bit):
   Usually used for ROM bank
4) Memory mapping
   Chip select function with eight signal lines CS0-7
   Six address and bank address register decode output lines
5) General-purpose input/output ports
   In the ER-2595, these ports are used for printwheel- type printer magnet control.
6) Chip select
   The MPC2 identifies its own chip select signal from the received signal. No special chip select pins are provided.
   Chip select when (AD5, AD4, AD3, AD2, AD1, AD0) = (0, 0, 1, 1, 0, 0)
7) General-purpose output port
   Shares with the bank output line and SSP control line.
8) SSP control
   Capable of SSP control using an external monitor RAM.
   (Not used for the ER-2595)

(2) Pin configuration

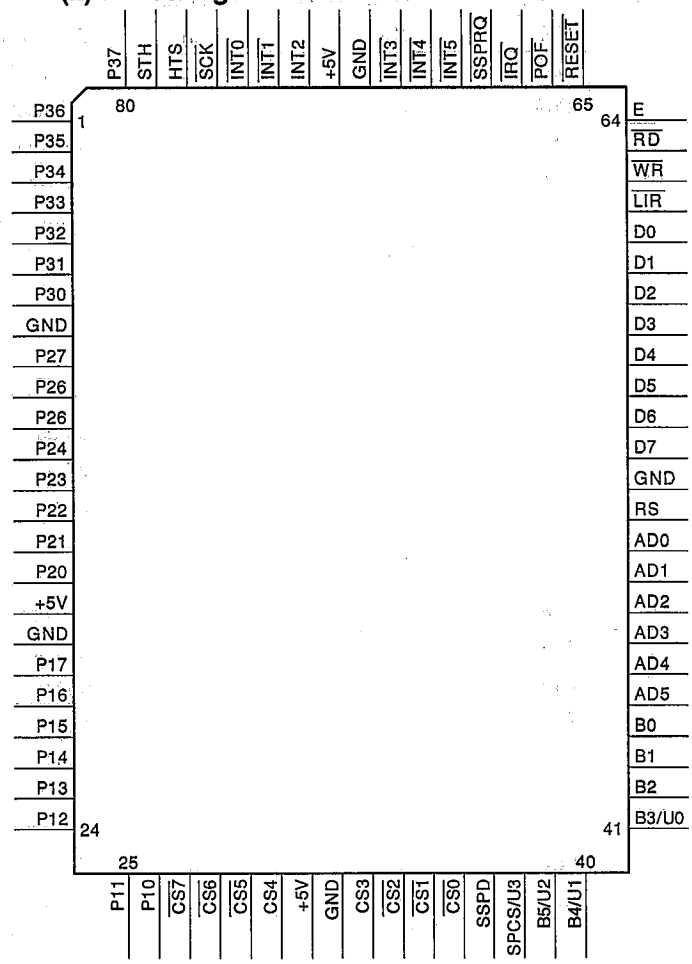

Fig. 9-4

(3) Block diagram

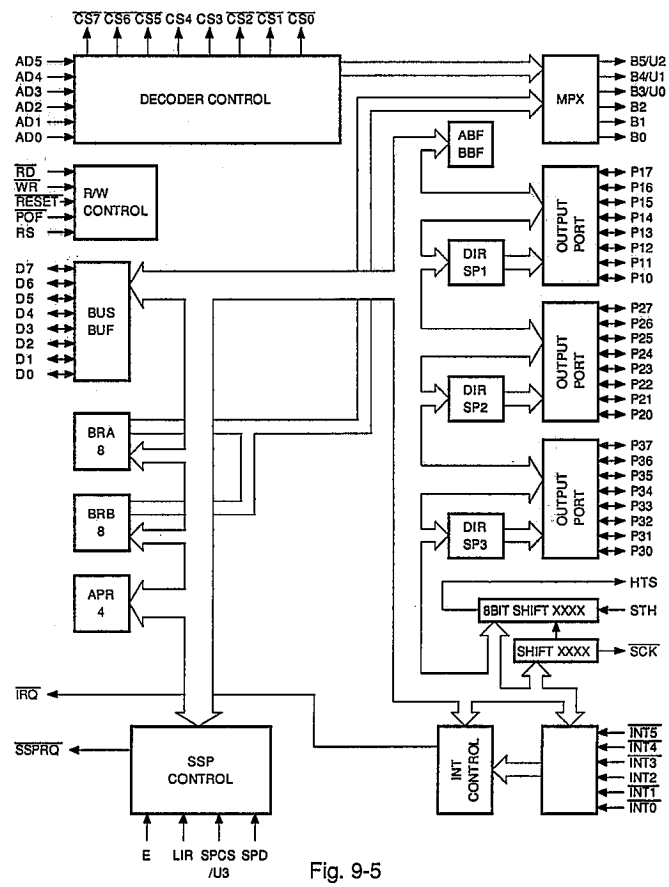

Fig. 9-5

(4) Terminal Description

No.	Terminal name	Signal name	In/Out	Description
1 ~ 7	P36 ~ P30	RMG11 ~ RMG5	Out ~ Out	Printer receipt side magnet drive
8	GND	GND	—	GND
9 ~ 12	P27 ~ P24	RMG4 ~ RMG1	Out ~ Out	Printer receipt side magnet drive
13 ~ 16	P23 ~ P20	JMG12 ~ JMG9	Out ~ Out	Printer Journal side magnet drive
17	GND	GND	—	GND
18 ~ 26	P17 ~ P10	JMG8 ~ JMG1	Out ~ Out	Printer Journal side magnet drive
27 28 29 30	$\overline{CS7}$ $\overline{CS6}$ $\overline{CS5}$ CS4	$\overline{OPTCS}$ $\overline{CTCS}$ $\overline{RAS2}$ RAS1	Out Out Out Out	Option select signal (ER-20IN) Not used Not used Option RAM select
31	+5V	+5V	—	Power +5V
32	GND	GND	—	GND
33 34 35 36	CS3 $\overline{CS2}$ $\overline{CS1}$ $\overline{CS0}$	RAS0 $\overline{ROS2}$ $\overline{ROS1}$ $\overline{ROS0}$	Out Out Out Out	Standard RAM select Not used Option ROM select Standard RAM select
37 38	SSPD SPCS/U3	— —	— —	+5V (Not used) Non-connect
39 40 41 ~ 44	B5/U2 B4/U1 B3/U0 ~ B0	B5 B4 B3 ~ B0	Out ~ Out	ROM/RAM Bank information output signal
45 ~ 50	AD5 ~ AD0	A15 ~ A10	In ~ In	Address input
51	RS	A0	In	Register select signal
52	GND	GND	—	GND
53 ~ 60	D7 ~ D0	D7 ~ D7	In/Out ~ In/Out	Data Bus
61	$\overline{LIR}$	+5V	—	Not used
62 63 64	$\overline{WR}$ $\overline{RD}$ E	$\overline{WR}$ $\overline{RD}$ E	In In In	Write signal Read signal Not used
65 66 67	$\overline{RESET}$ $\overline{POF}$ $\overline{IRQ}$	$\overline{RESET}$ $\overline{POFF}$ $\overline{MPCRQ}$	In In Out	Reset signal input Power off check input Interrupt request to host
68	$\overline{SSPRQ}$	—	—	Not used
69 70 71	$\overline{INT5}$ $\overline{INT4}$ $\overline{INT3}$	$\overline{EXINT}$ $\overline{RSRQ}$ $\overline{TRRQ}$	In In In	Interrupt request from external option Interrupt request from RS (ER-20RS) Interrupt request from In-line (ER-20IN)
72 73	GND +5V	GND +5V	— —	GND +5V
74 75 76	INT2 $\overline{INT1}$ $\overline{INT0}$	Pα $\overline{KRQ}$ $\overline{SHEN}$	In In In	Printer α signal input CKDC III interrupt request SHIFT enable input from CKDC III
77 78 79	SCK HTS STH	$\overline{SCK}$ HTS STH	Out Out In	SHIFT clock (For CKDC III) SHIFT DATA HOST to SUB (MPC2→CKDC III) SHIFT DATA SUB to HOST (MPC2←CKDC III)
80	P37	RMG12	Out	Printer receipt side magnet dirve

12-4. CKDCIII (HD404708A73FS) description

(1) General

The CKDCIII is a 4-bit microcomputer developed for the ER-2595, and provides functions to control the real-time clock, keys, and displays. The basic functions of the CKDCIII are shown below.

Keys: The CKDCIII is capable of controlling a maximum of 253 momentary keys. (Sharp 2-key rollover control)
Sumultaneous scanning of key and switch
(When a key is scanned, the state of a mode, clerk, and other switch is also buffered. The host can scan the state of switch together with the key entry data at the same time the key is scanned.)

Switches: Mode switch with 14 positions maximum
8-bit clerk (cashier) switch
2-bit feed switch
1-bit receipt on/off switch
1-bit option switch
4-bit general-purpose switch (1-bit is used for keyboard select)

Displays: 16-column dot display
12-column 7-segment display (column digit selectable)
All column blink controlled for the dot and 7-segment display decimal point and indicators
Programmable patterns for 7-segment display: Four patterns
Internal driver for 7-segment display

Buzzer: Single tone control

Clock: Year, month, day of month, day of week, hour, minute

Alarm: Hour, minute

Interrupt request (event control):
Detection of key input, switch position change, alarm issue, and counter overflow

(2) System Diagram

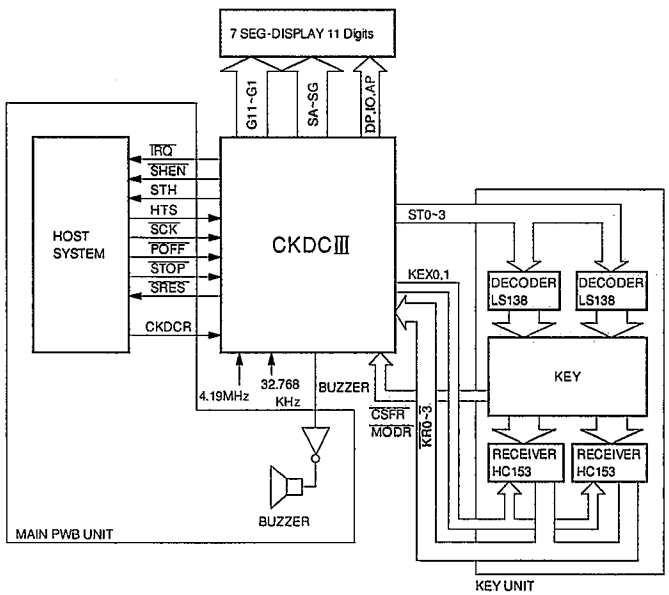

Fig. 9-6

(3) Pin Assignment

Pin No.	Port	I/O	RESET standby		Signal name	Notes	PULL-UP -DOWN
		I/O	State	I/O			
1	$R0_1$	I/O	H-Z	O	SB	SEG-B	100kΩ PULL-DOWN
2	$R0_2$	I/O	H-Z	O	SC	SEG-C	100kΩ PULL-DOWN
3	$R0_3$	I/O	H-Z	O	SD	SEG-D	100kΩ PULL-DOWN
4	$R1_0$	I/O	H-Z	O	SE	SEG-E	100kΩ PULL-DOWN
5	$R1_1$	I/O	H-Z	O	SF	SEG-F	100kΩ PULL-DOWN
6	$R1_2$	I/O	H-Z	O	SG	SEG-G	100kΩ PULL-DOWN
7	$R1_3$	I/O	H-Z	O	P4	AP	100kΩ PULL-DOWN
8	$R2_0$	I/O	H-Z	O	P0	NOT USE	
9	$R2_1$	I/O	H-Z	O	P1		
10	$R2_2$	I/O	H-Z	O	P2	DP	100kΩ PULL-DOWN
11	$R2_3$	I/O	H-Z	O	P3	ID	100kΩ PULL-DOWN
12	RA_0	I	I	I	$\overline{MODER}$	MODE RETURN from KEY BOARD UNIT	
13	RA_1	I	I	I	$\overline{CFSR}$	CLEARK, FEED, SWITCH: RETURN from KEYBOARD	
14	$R3_0$	I/O	H-Z	O		NOT USED	
15	$R3_1$	I/O	H-Z	O			
16	$R3_2$	I/O	H-Z	O			
17	$R3_3$	I/O	H-Z	O			
18	$R5_0$	I/O	I	O	ST0	ST0	Key SCAN timing signal (to KEY UNIT)
19	$R5_1$	I/O	I	O	ST1	ST1	
20	$R5_2$	I/O	I	O	ST2	ST2	
21	$R5_3$	I/O	I	O	ST3	ST3	
22	$R6_0$/INT0	I/O	I	I	$\overline{POFF}$	P-OFF signal input	
23	$R6_1$/INT1	I/O	I	I	$\overline{STOP}$	/STOP request signal from HOST CPU input	
24	$R6_2$/INT2	I/O	I	O	$\overline{SHEN}$	/SHEN output	
25	$R6_3$/INT3	I/O	I	O	$\overline{KRQ}$	/IRQ output	
26	Vcc				V_{CKDC}	Power supply	
27	$R4_0$/SCK	I/O	I	I	$\overline{SCK}$	/SCK input	
28	$R4_1$/SI	I/O	I	I	HTS	HTS	
29	$R4_2$/SO	I/O	I	O	STH	STH	
30	$R4_3$/PWM	I/O	I	I	SKR0	GND	
31	$R7_0$/BUZZ	I/O	I	O	BUZZ	BUZZER	
32	$R7_1$	I/O	I	O	—	NOT USED	

NOTE 3: Pull-up/down in the table indicates that the lines concerned require external pull-up/down resistance.

Pin No.	Port	I/O	RESET standby		Signal name	Notes	PULL-UP -DOWN
		I/O	State	I/O			
33	$R7_2$	I/O	I	O	$\overline{SRES}$	SYSTEM RESET	10kΩ PULL-DOWN
34	$R7_3$	I/O	I	O	—	NOT USE	
35	$R8_0$	I/O	I	O	KEX0	KEY EXCHANGE0 OUTPUT to KEY UNIT	
36	$R8_1$	I/O	I	O	KEX1	KEY EXCHANGE1 OUTPUT to KEY UNIT	
37	$R9_0$	I	I	I	$\overline{KR0}$	KEY RETURN INPUT from KEY UNIT	
38	$R9_1$	I	I	I	$\overline{KR1}$	KEY RETURN INPUT from KEY UNIT	
39	$R9_2$	I	I	I	$\overline{KR2}$	KEY RETURN INPUT from KEY UNIT	
40	$R9_3$	I	I	I	$\overline{KR3}$	KEY RETURN INPUT from KEY UNIT	
41	RESET					CKDC III RESET	220Ω PULL-DOWN
42	OSC2					32.768 X'tal	
43	OSC1						
44	GND					GND	
45	CL1					4.19MHz OSC	
46	CL2						
47	TEST	I	I			+5V	
48	D0	I/O	H-Z	O	—	NOT USED	
49	D1	I/O	H-Z	O	—		
50	D2	I/O	H-Z	O	—		
51	D3	I/O	H-Z	I	(RQ)	GND (NOT USED)	
52	D4	I/O	H-Z	O	G0	NOT USE	
53	D5	I/O	H-Z	O	G1	7SEG DIG 1	100kΩ PULL-DOWN
54	D6	I/O	H-Z	O	G2	7SEG DIG 2	100kΩ PULL-DOWN
55	D7	I/O	H-Z	O	G3	7SEG DIG 3	100kΩ PULL-DOWN
56	D8	I/O	H-Z	O	G4	7SEG DIG 4	100kΩ PULL-DOWN
57	D9	I/O	H-Z	O	G5	7SEG DIG 5	100kΩ PULL-DOWN
58	D10	I/O	H-Z	O	G6	7SEG DIG 6	100kΩ PULL-DOWN
59	D11	I/O	H-Z	O	G7	7SEG DIG 7	100kΩ PULL-DOWN
60	D12	I/O	H-Z	O	G8	7SEG DIG 8	100kΩ PULL-DOWN
61	D13	I/O	H-Z	O	G9	7SEG DIG 9	100kΩ PULL-DOWN
62	D14	I/O	H-Z	O	G10	7SEG DIG 10	100kΩ PULL-DOWN
63	D15	I/O	H-Z	O	G11	7SEG DIG 11	100kΩ PULL-DOWN
64	$R0_0$	I/O	H-Z	O	SA	SEG-A	100kΩ PULL-DOWN

12-5. Clock generator

(1) CPU (HD63A03X)

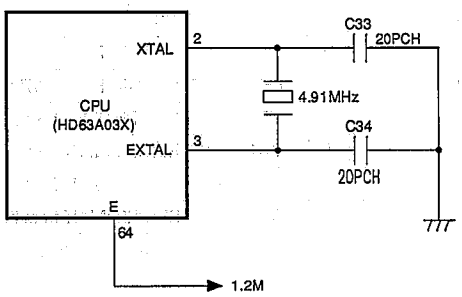

Fig. 9-7

Basic clock is supplied from a 4.91MHz ceramic oscillator.

The CPU contains an oscillation circuit from which the basic clock is internally derived. If the CPU was not operating properly, the signal does not appear on this line in most cases.

(2) HD404708A73FS CKDC-III oscillation circuit (Display-PWB)

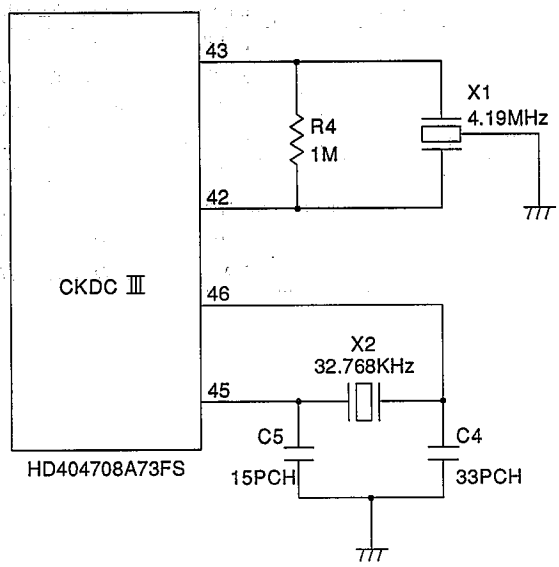

Fig. 9-8

Two oscillators are connected to the CKDC-III.

The main clock X1 generates 4.19MHz which is used during power on.

When power is turned off, the CKDC-III goes into the standby mode and the main clock stops.

The sub-clock X2 generates 32.768KHz which is primarily used to update the internal RTC (real time clock). During the standby mode, it keeps oscillating to update the clock and monitoring the power recovery.

12-6. Reset (POFF) circuit

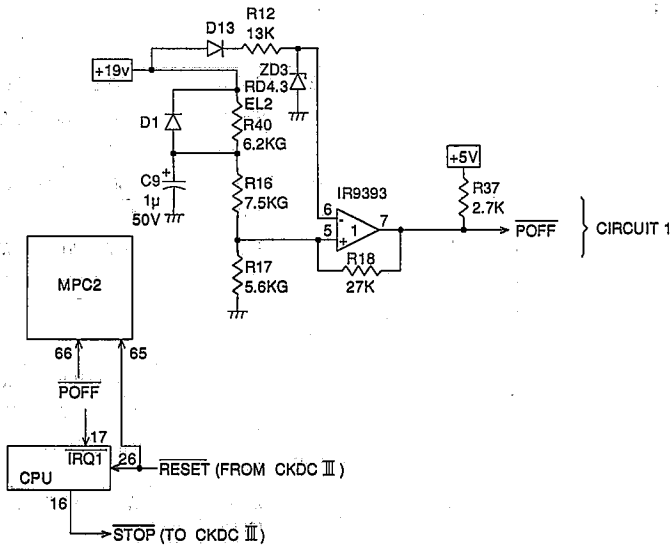

Fig. 9-9

In order to prevent memory loss at power off or power supply failure of the ECR, the power supply condition is monitored at all times. When a power failure is met, the CPU suspends the execution of the current program and immediately executes the power-off program to save the data in the CPU registers in the external S-RAM with the signal $\overline{\text{STOP}}$ forced low to prepare for the power-off situation. The signal $\overline{\text{STOP}}$ is supplied to the CKDC-III as signal $\overline{\text{RESET}}$ to reset the devices.

<Circuit 1>

This circuit monitors +19V supply voltage.

The voltage at the (–) pin of the comparator IR9393 is always maintained to 4.3V by means of the zener diode ZD3, while +19V supply voltage is divided through the resistors R4, R16, and R17, and is applied to the (+) pin. When normal +19V is in supply, 5.51V is supplied to the (+) pin, therefore, signal $\overline{\text{POFF}}$ is at a high level. When +19V supply voltage decreases due to a power off or any other reason, the voltage at the (+) pin also decreases. When +19V supply voltage drops below 14.8V, the voltage at the (+) pin drops below +4.3V, which causes $\overline{\text{POFF}}$ to go active.

12-7. Memory control

(1) Block diagram

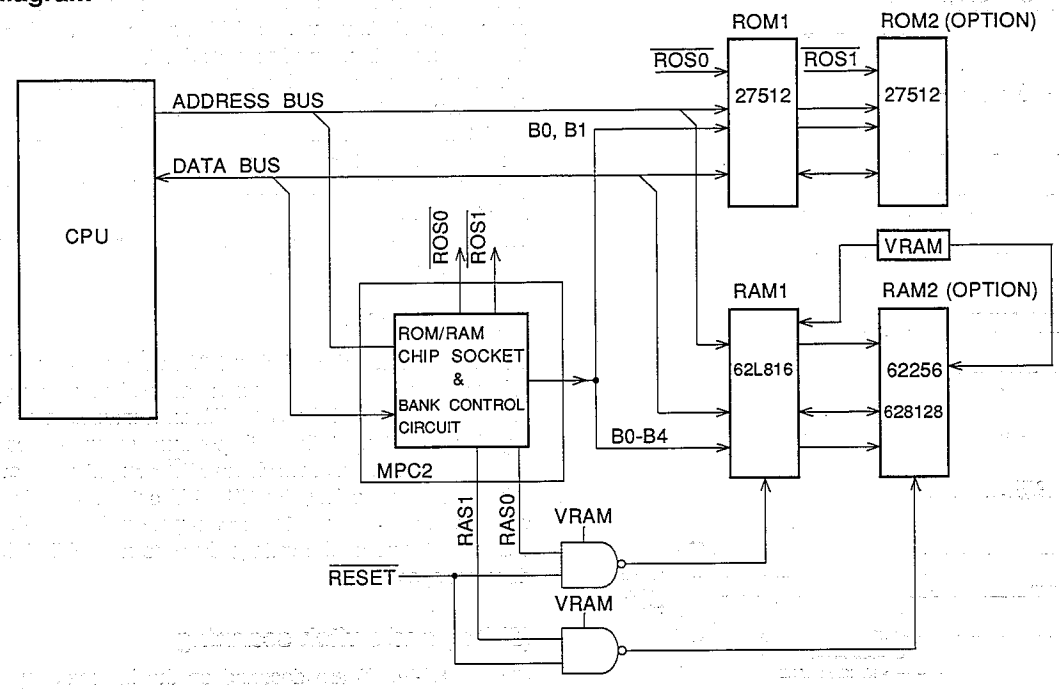

Fig. 9-11

ROM/RAM selection is achieved with the address decoder and the bank control circuit in the MPC2.

The chip select signal is ANDed with signal $\overline{\text{RESET}}$ to prevent to access during the reset state.

(2) Memory map

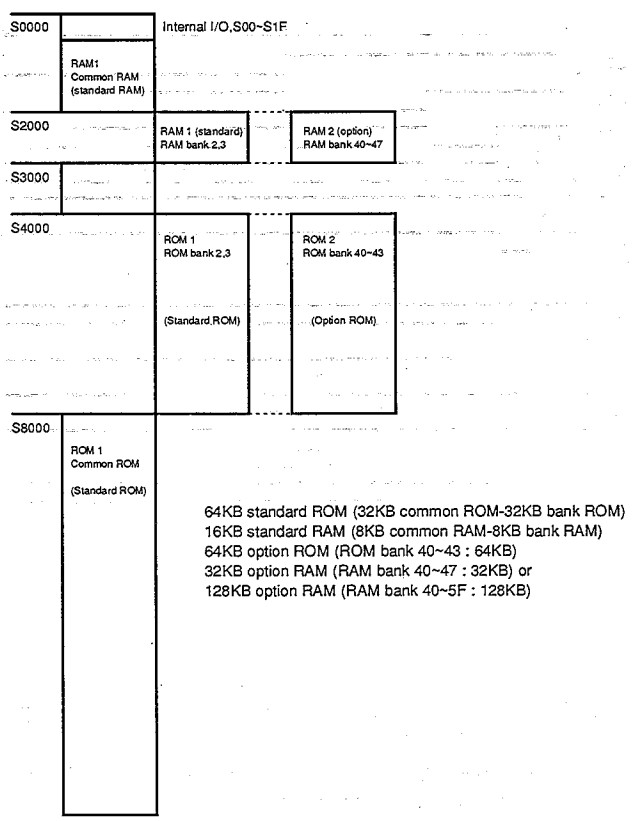

64KB standard ROM (32KB common ROM-32KB bank ROM)
16KB standard RAM (8KB common RAM-8KB bank RAM)
64KB option ROM (ROM bank 40~43 : 64KB)
32KB option RAM (RAM bank 40~47 : 32KB) or
128KB option RAM (RAM bank 40~5F : 128KB)

Fig. 9-12

12-8. SIO (Serial I/O) interface control

The ECR to ECR and ECR to floppy disk loader/damper serial interface is controlled by the CPU serial port.

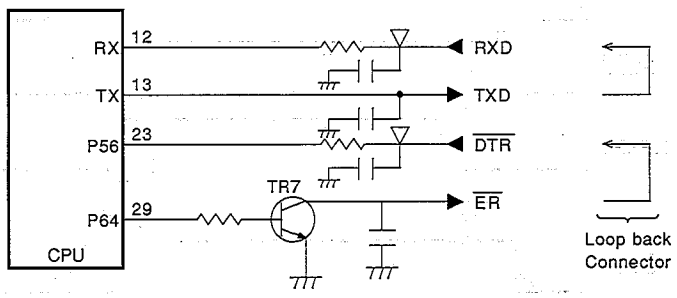

Fig. 9-13

12-9. Key, display, timer, buzzer controls

The keys, switches, displays, timer/calendar, and buzzer are controlled by the CKDC-III on the display PWB.

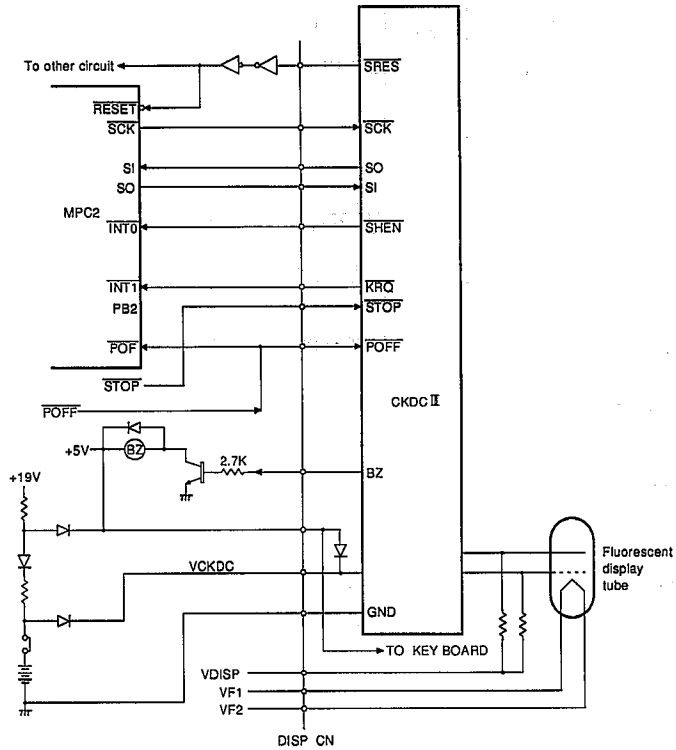

Fig. 9-14 Block diagram

(1) Power on/off sequence

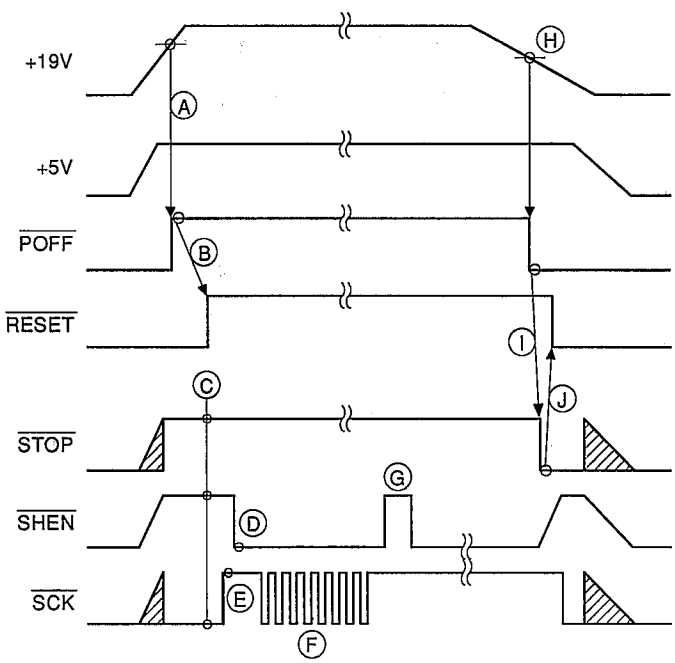

Fig. 9-15

Hatched area indicates logic unstable.

<At power on>

When +19V power rises to 17V, the signal $\overline{POFF}$ is forced high Ⓐ, by which time the +5V supply becomes stable. The CKDC-III monitors the state of $\overline{POFF}$ while updating the timer/calendar in the low power standby mode, and when the high state of $\overline{POFF}$ is detected, the system reset signal ($\overline{RESET}$) is set high Ⓑ, by which time the output lines $\overline{STOP}$ and $\overline{SCK}$ of the CPU have been initialized to high and low, respectively Ⓒ. Thereafter, the CKDC-III sets $\overline{SHEN}$ active (low) Ⓓ to notify the CPU of the command/data communication ready state. By that time, the CPU has set $\overline{SCK}$ high by the program to get ready for transfer of command/data.

One byte data/command can be transferred with eight $\overline{SCK}$ pulses Ⓕ. When one byte has been transferred with eight $\overline{SCK}$ pulses, the CKDC-III sets $\overline{SHEN}$ high to initiate internal processing. After completion of the internal processing, when the next byte transfer becomes ready, the CKDC-III sets $\overline{SHEN}$ back to a low state to wait for the next byte transfer Ⓖ.

Thereafter, the $\overline{SHEN}$ and $\overline{SCK}$ timing described above is repeated to carry on the communication.

<At power off>

When +19V power drops below 16V, $\overline{POFF}$ goes low Ⓗ.

A low on the $\overline{POFF}$ line causes a low level interrupt request which is sent the $\overline{IRQ0}$ pin of the CPU. Within a maximum of 10msec of the high level INT0 input, the CPU performs software processing necessary for power-off, after which the $\overline{STOP}$ output is set low Ⓘ.

When $\overline{STOP}$ goes low, the CKDC-III sets $\overline{RESET}$ low to reset the whole system Ⓙ. And, the +5V supply is held at 4.75V or higher voltage, after which the voltage drops to a level that the logic circuit does not operate.

(2) Key and switch scanning

Strobes ST0~ST3 are decoded on the keyboard by two 74LS138 3-to-8 decoders to generate 16 strobe signals of $\overline{S15}$~$\overline{S0}$.

The key matrix consists of 16 strobe lines and 16 returns lines of $\overline{KR0A}$, $\overline{KR1A}$, $\overline{KR2A}$, $\overline{KR3A}$, $\overline{KR0B}$, $\overline{KR1B}$, $\overline{KR2B}$, $\overline{KR3B}$, $\overline{KR0C}$, $\overline{KR1C}$, $\overline{KR2C}$, $\overline{KR3C}$, $\overline{KR0D}$, $\overline{KR1D}$, $\overline{KR2D}$, and $\overline{KR3D}$.

To minimize interfacing lines between the CKDCIII and the keyboard unit, two multiplexers (74HC153) are used to multiplex signals by the timing controlled with the signals KEX0 and KEX1 which are sent to the CKDCIII on the return lines of $\overline{KR0}$~$\overline{KR3}$.

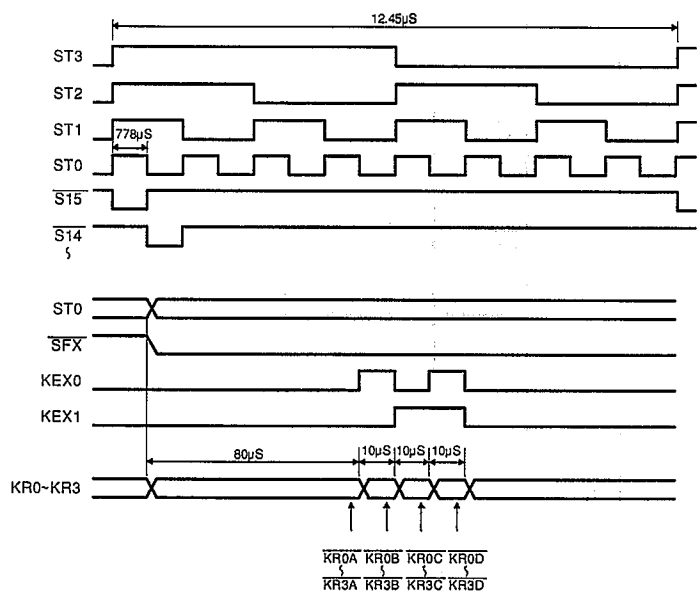

Fig. 9-16

The mode switch is provided with a special return line $\overline{MODR}$, apart from the above return lines.

In the same manner, the clerk, paper feed key (J/R), and receipt on/off switches use $\overline{CSFR}$ as the return line.

(3) Display control

The CKDCIII has an internal driver to directly drive the fluorescent display tube through the output line.

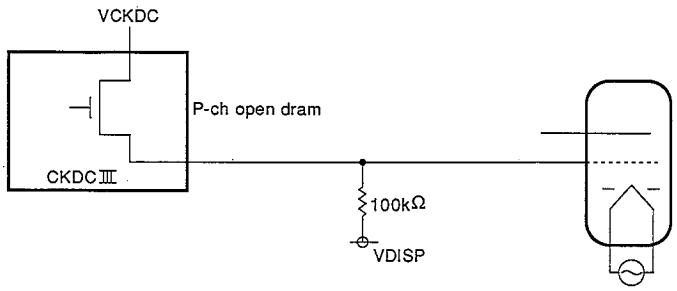

Fig. 9-17

The above figure is an example of the grid driver Gn. The segment driver has the same circuit configuration.

The display tube employs a grid blanking dynamic drive and operates in the following timing.

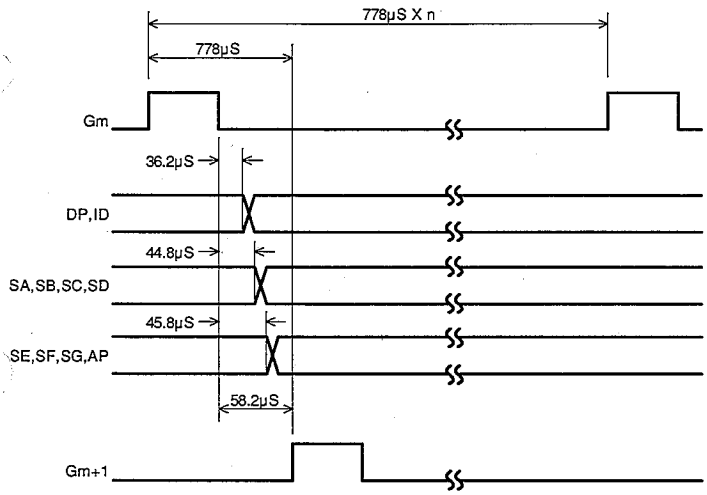

Fig. 9-18

12-10. Printer control

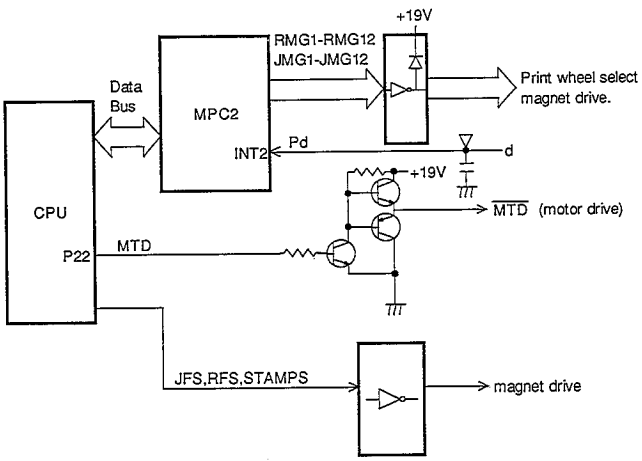

Fig. 9-19

The printer is controlled by the character select magnet drive ports of the CPU to drive the motor, paper feed magnet, stamp magnet, and auto cutter magnet through the general-purpose ports of the MPC2.

Signals sent from the printer are converted into digital signals which are then sent to INT2 of the MPC2. The CPU writes the print data in the internal register of the MPC2 synchronizing with the timing signals.

12-11. Drawer drive

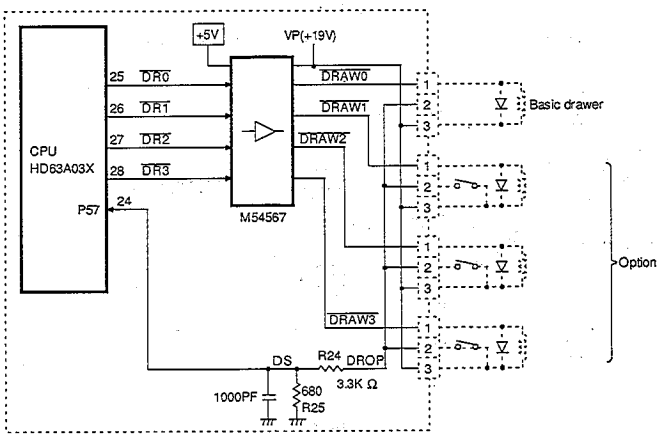

Fig. 9-20

The drawer open signal (DRAW0–DRAW3) is issued from the CPU and supplied to the driver IC (M54567P) to drive drawer magnet. The drawer switch closes when the drawer is closed which causes the drawer sensor signal (DS) to turn high level. After it is converted into a TTL level in the CR network, DS is then supplied to the CPU as the drawer open signal. (P57)

- Drawers, 1 thru 3, are optional
- Diode attached to the drawer is a spark killer.
- The standard drawer is not equipped with the sensor.

12-12. Power supply circuit

(1) Block diagram

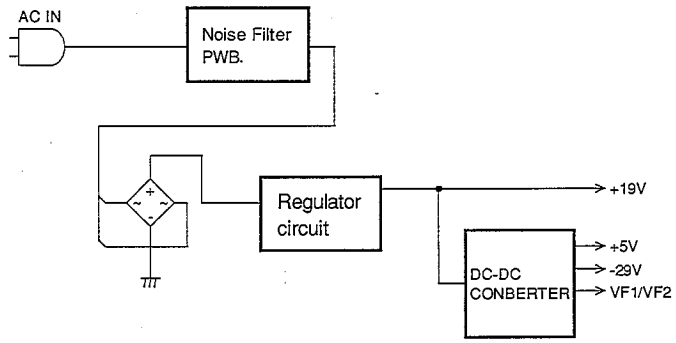

Fig. 9-21

(2) Regulator circuit

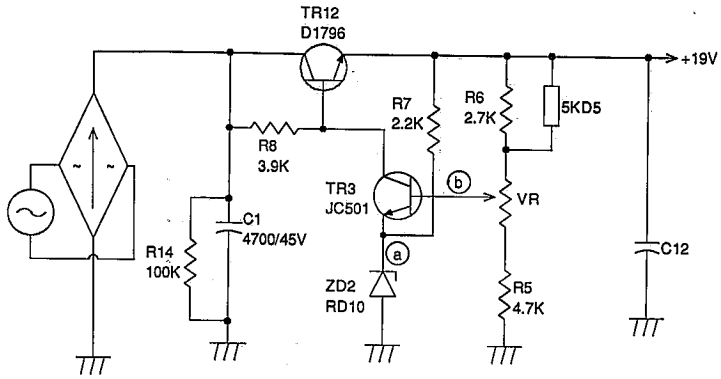

Fig. 9-22

1) When Power switch is turned ON, base voltage is added to TR12 so that it goes active.
2) With an active state of TR12, the voltage +19V line starts to rise.
3) When the voltage at point a reaches 10V via R7, ZD2 then comes active.
4) If the base voltage is added to TR3 in this moment, TR3 is turned on and TR12 turns off.
5) As TR12 turns off, +19V line them starts to drop.
6) As +19V line starts dropping, it also causes TR3 base voltage to decrease and TR3 turns off finally.
7) TR2 starts to rise again and +19V line begins to rise.
8) +19V line is controlled stable by repeating the above steps, 4) thru 7).

* In order to make explanation easier for the power supply circuit, description is provided in terms of switching the transistor. But, actually it operates in the active area.

13. Circuit diagram and PWB layouts

13-1. Main PWB (F7134) circuit 1/2

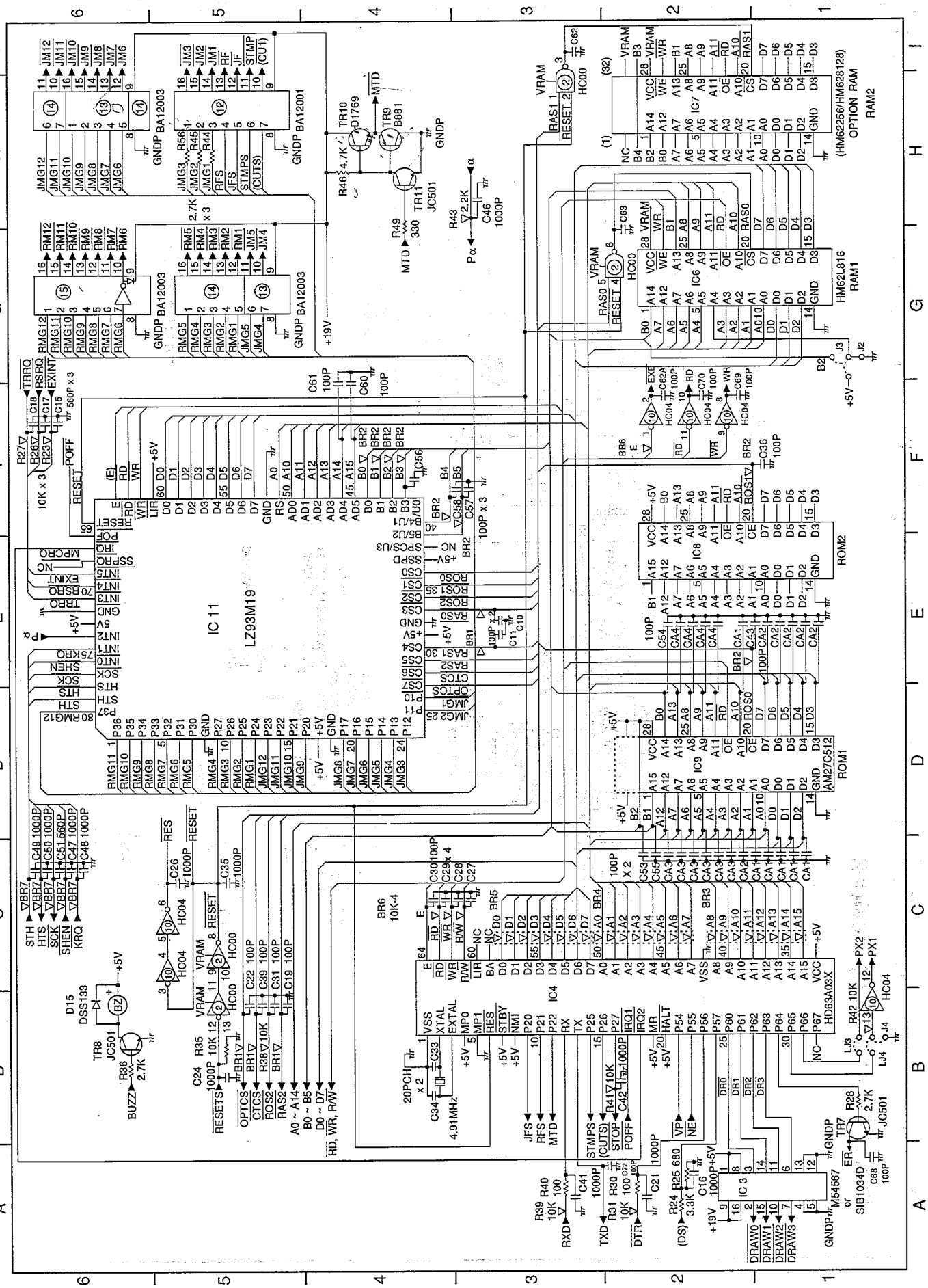

13-2. Main PWB (F7134) circuit 2/2

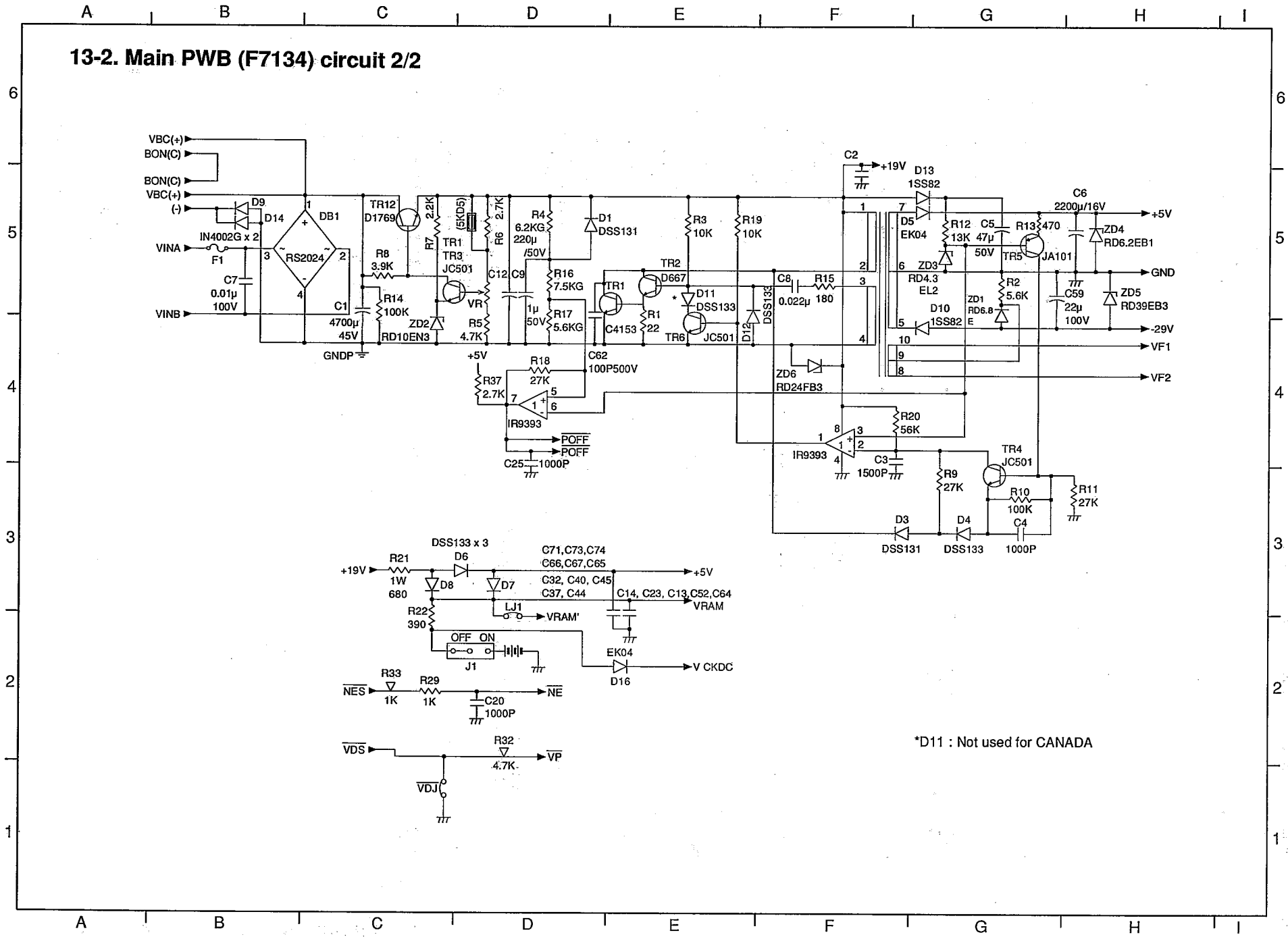

*D11 : Not used for CANADA

13-3. Main PWB layout

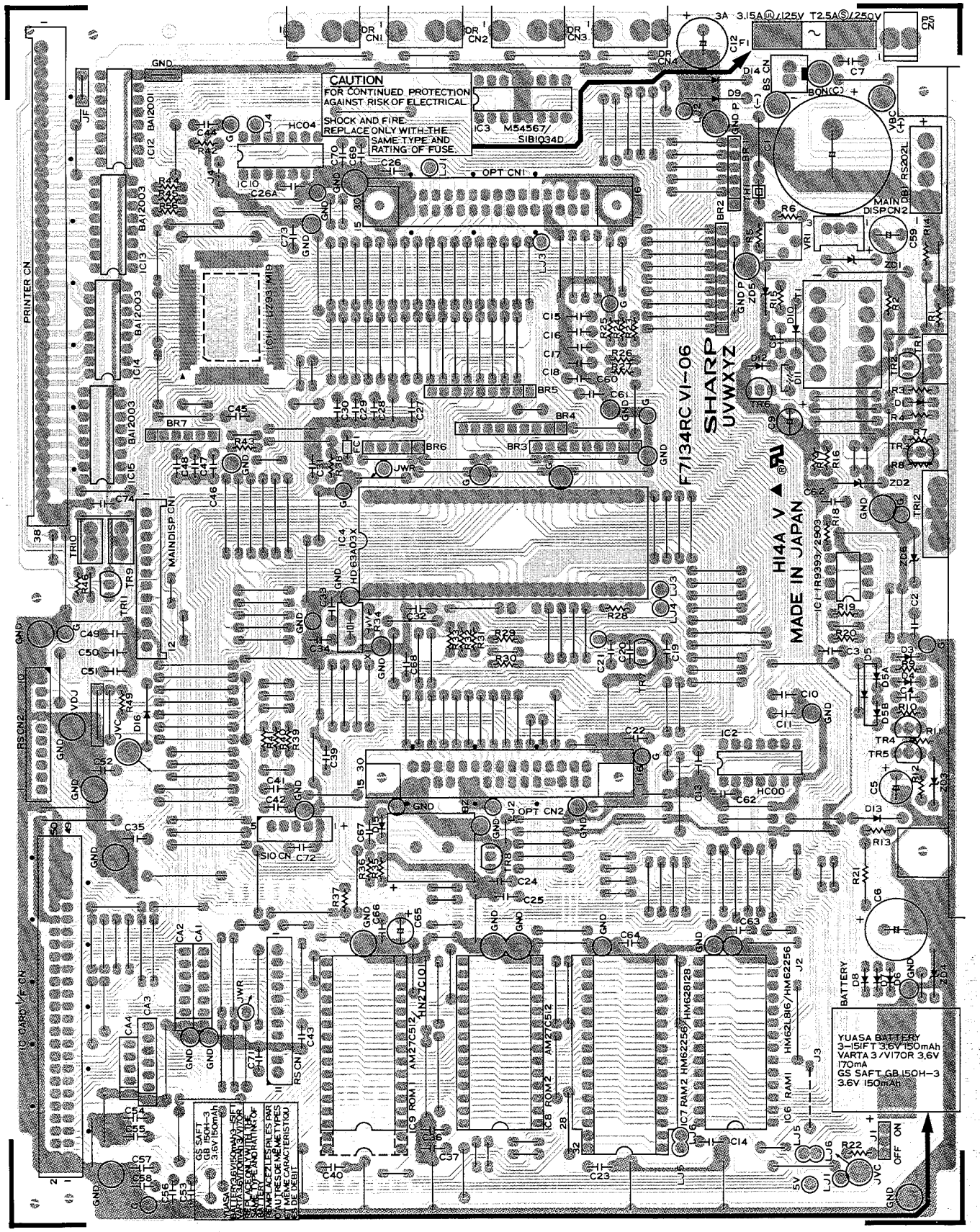

13-4. Display PWB circuit

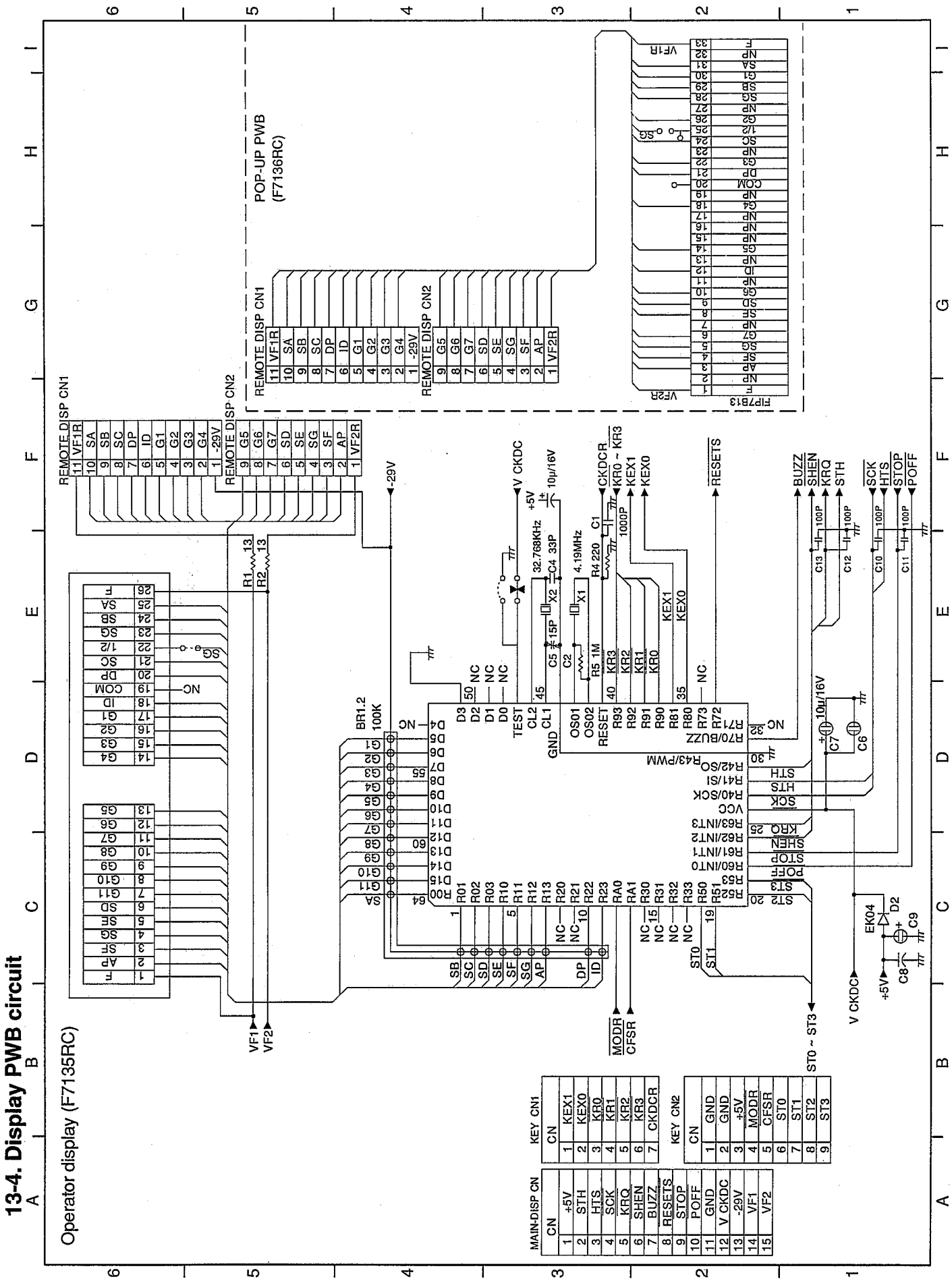

13-5. Display PWB layout

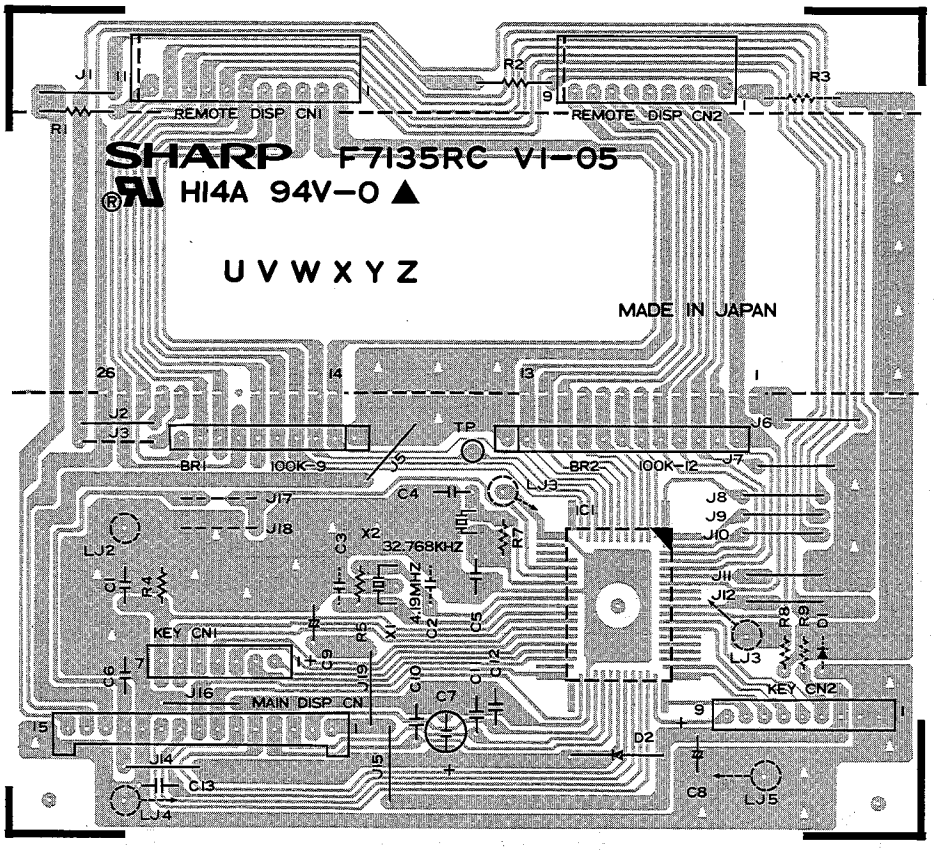

13-6. Pop-up display layout

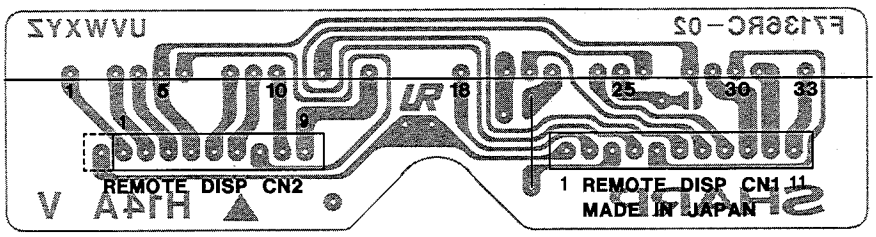

13-7. Keyboard circuit

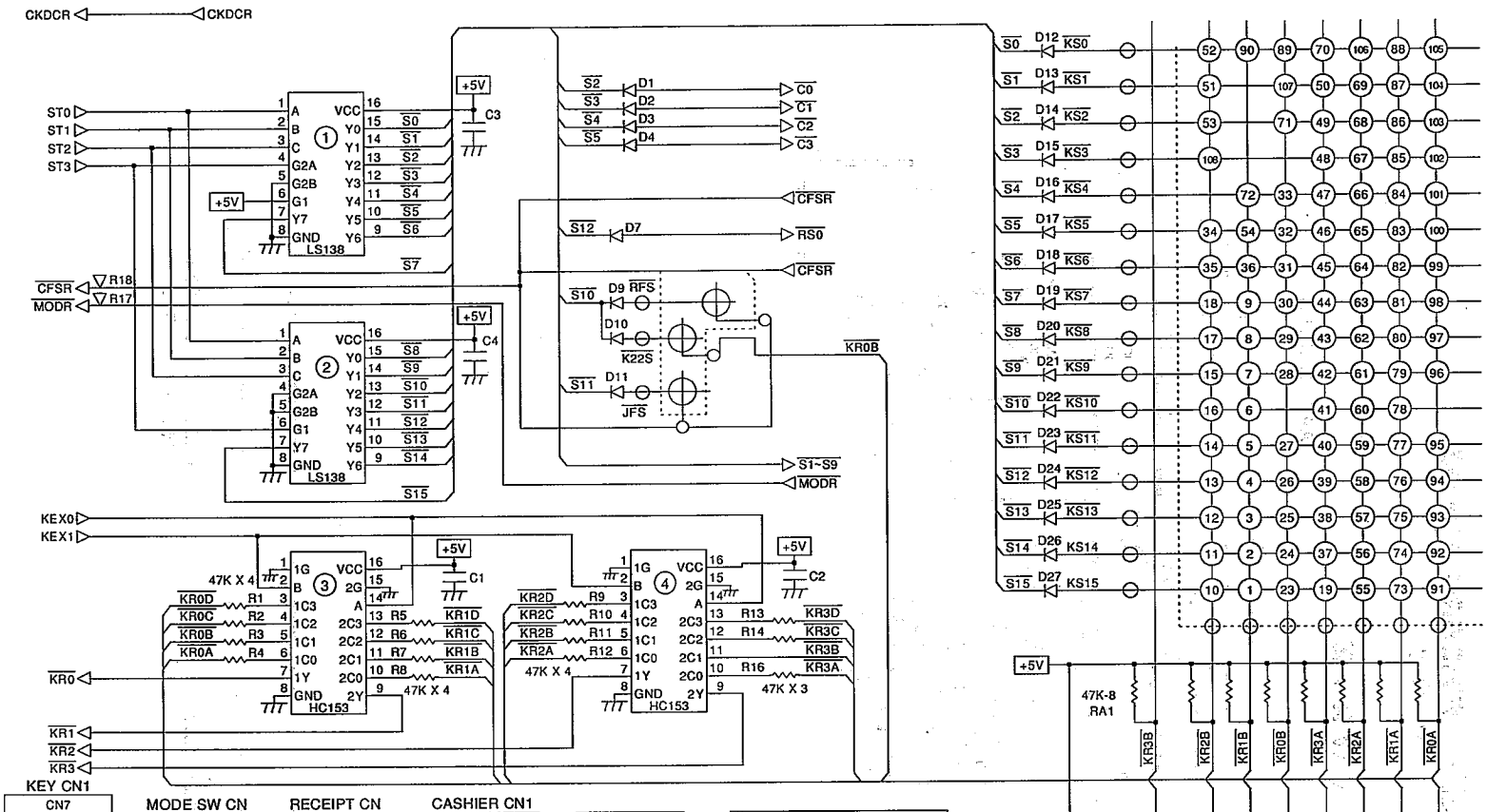

KEY CN1

CN7	
1	KEX1
2	KEX0
3	KR0
4	KR1
5	KR2
6	KR3
7	CKDCR

KEY CN2

CN8	
1	GND
2	GND
3	+5V
4	MODR
5	CFSR
6	ST0
7	ST1
8	ST2
9	ST3

MODE SW CN

CN6	
1	MODR
2	+5V
3	CKDCR
4	S9
5	S8
6	S7
7	S6
8	S5
9	S4
10	S3
11	S2
12	S1

RECEIPT CN

CN9	
1	RS0
2	CFSR

CASHIER CN1

CN1	
1	C0
2	C1
3	CFSR

CASHIER CN2

CN2	
1	C2
2	C3
3	CFSR

CN11	
1	CSFR
2	CSFR
3	KR0B
4	KR2B
5	KR1B
6	KR0B
7	KR3A
8	KR2A
9	KR1A
10	KR0A

CN12			
1	RFS	11	KS8
2	JFS	12	KS7
3	K22S	13	KS6
4	KS15	14	KS5
5	KS14	15	KS4
6	KS13	16	KS2
7	KS12	17	KS0
8	KS11	18	KS1
9	KS9	19	KS3
10	KS10		

13-8. Key code table

									1	2	3	4	5	6	7	8	9
									10	11	12	13	14	15	16	17	18
19	↑ RECEIPT	↑ JOURNAL	22	23	24	25	26	27	28	29	30	31	32	33	34	35	36
37	38	39	40	41	42	43	44	45	46	47	48	49	50	51	52	53	54
55	56	57	58	59	60	61	62	63	64	65	66	67	68	69	70	71	72
73	74	75	76	77	78	79	80	81	82	83	84	85	86	87	88	89	90
91	92	93	94	95	96	97	98	99	100	101	102	103	104	105	106	107	108

13-9. Noise FILTER circuit

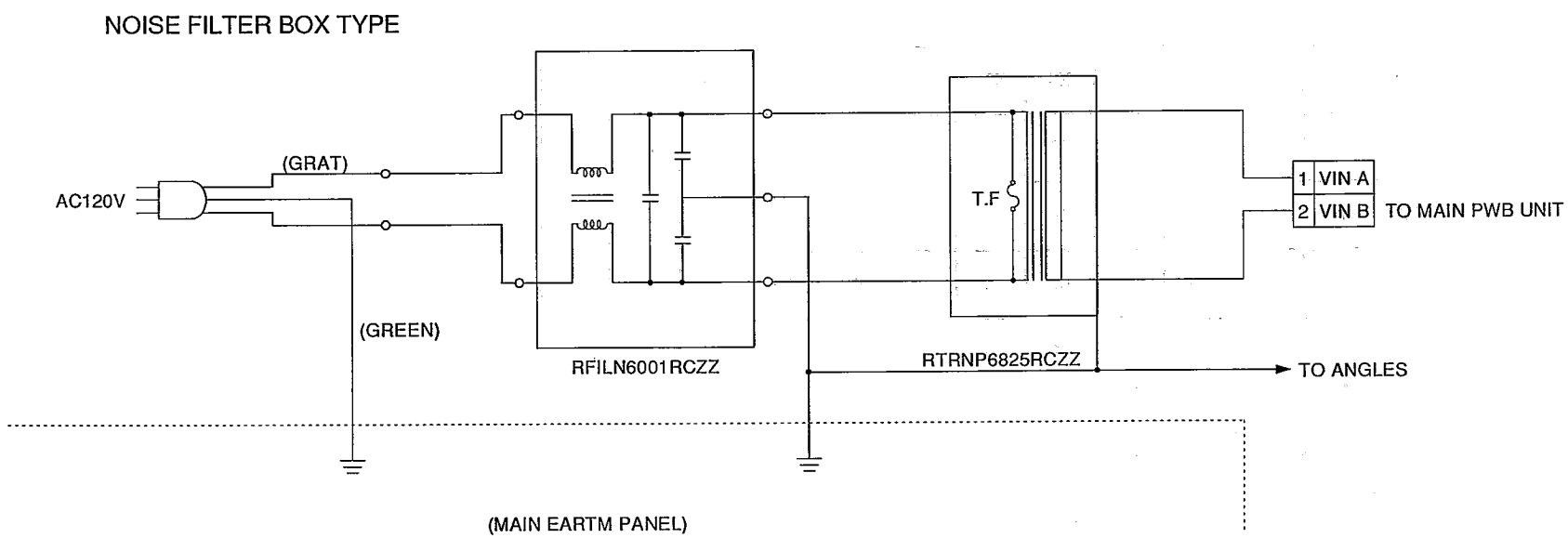

13-10. Main PWB connector table

OPT CN1

CN			
GND	15	30	GND
$\overline{EXE}$	14	29	$\overline{RES}$
$\overline{POFF}$	13	28	VRAM'
RD	12	27	R/$\overline{W}$
WR	11	26	NC
D6	10	25	D7
D4	9	24	D5
D2	8	23	D3
D0	7	22	D1
NC	6	21	NC
$\overline{PX1}$	5	20	NC
GND	4	19	NC
$\overline{EXINT}$	3	18	NC
$\overline{RSRQ}$	2	17	GND
$\overline{TRRQ}$	1	16	$\overline{PX2}$

OPT CN2

CN			
GND	15	30	+5V
GND	14	29	+5V
$\overline{RESET}$	13	28	NC
$\overline{OPTCS}$	12	27	A4
GNDP	11	26	A5
GNDP	10	25	A6
A13	9	24	A1
A10	8	23	A2
A9	7	22	A3
A7	6	21	A11
A12	5	20	NC
A8	4	19	GND
NC	3	18	GND
NC	2	17	A0
+19V	1	16	+19V

PRINTER CN

CN	
1	$\overline{NES}$
2	$\overline{VDS}$
3	NC
4	($\overline{CUT}$)
5	$\overline{STMP}$
6	$\overline{JF}$
7	$\overline{RF}$
8	+19V
9	$\overline{JM1}$
10	$\overline{JM2}$
11	$\overline{JM3}$
12	$\overline{JM4}$
13	$\overline{JM5}$
14	$\overline{JM6}$
15	$\overline{JM7}$
16	$\overline{JM8}$
17	$\overline{JM9}$
18	$\overline{JM10}$
19	$\overline{JM11}$
20	$\overline{JM12}$
21	+19V
22	$\overline{MTD}$
23	+19V
24	$\overline{RM1}$
25	$\overline{RM2}$
26	$\overline{RM3}$
27	$\overline{RM4}$
28	$\overline{RM5}$
29	$\overline{RM6}$
30	$\overline{RM7}$
31	$\overline{RM8}$
32	$\overline{RM9}$
33	$\overline{RM10}$
34	$\overline{RM11}$
35	$\overline{RM12}$
36	+5V
37	α
38	GND

RS CN1

CN	
1	D3
2	D2
3	D1
4	D0
5	A0
6	A1
7	$\overline{OPTCS}$
8	$\overline{WR}$
9	GND
10	+5V
11	$\overline{RES}$

RS CN2

CN	
1	RD
2	A10
3	D4
4	D5
5	D6
6	D7
7	GND
8	+19V
9	$\overline{RSRQ}$
10	GND

SIO CN

CN	
1	GND
2	$\overline{ER}$
3	$\overline{DTR}$
4	RXD
5	TXD

DR CN1

CN	
1	$\overline{DRAW0}$
2	DS
3	+19V

DR CN2

CN	
1	$\overline{DRAW1}$
2	DS
3	+19V

DR CN3

CN	
1	$\overline{DRAW2}$
2	DS
3	+19V

DR CN4

CN	
1	$\overline{DRAW3}$
2	DS
3	+19V

PS CN

CN	
1	VinA
2	VinB

BT CN

CN	
1	V BC(+)
2	B ON(c)
3	(–)

BS CN

CN	
1	V BC(+)
2	B ON(c)

Not used for U.S.A and CANADA

MAIN DISP CN1

CN	
1	+5V
2	STH
3	HTS
4	$\overline{SCK}$
5	$\overline{KRQ}$
6	$\overline{SHEN}$
7	BUZZ
8	$\overline{RESETS}$
9	$\overline{STOP}$
10	$\overline{POFF}$
11	GND
12	VCKDC

MAIN DISP CN2

CN	
1	–29V
2	VF1
3	VF2

MEMO

SHARP PARTS GUIDE

MODEL ER-2595

CONTENTS

Parts marked with "⚠" are important for maintaining the safety of the set. Be sure to replace these parts with specified ones for maintaining the safety and performance of the set.

1 Exteriors

NO.	PARTS CODE	PRICE RANK	NEW MARK	PART RANK	DESCRIPTION	
1	GCÕVA6978RCZZ	AS	N	D	Printer cover	[U.S.A]
	GCÕVA6958RCZZ	AU		D	Printer cover	[Canada]
2	HBDGD6863RCZZ	AD	N	D	SHARP badge	
3	PFiLW6714RCZZ	AD		D	Journal filter	
4	LKGiW7107RC01	AK		B	Printer cover key	
5	MSPRT6689RC02	AC		C	Spring for lock key	
6	XBBSC30P10000	AA		C	Screw (3×10)	
7	XBBSC30P06000	AA		C	Screw (3×6)	
8	GCABB7061RCZZ	AW		D	Top cabinet	[U.S.A]
	GCABB7054RCZZ	AY		D	Top cabinet	[Canada]
9	GCABB7055RCZZ	AL		D	Cabinet for customer display	
10	CPWBF7136RC01	BD		E	Pop−up PWB unit	
11	PFiLW6870RCZZ	AL	N	D	Pop−up filter	
12	PFiLW6871RCZZ	AN	N	C	Display filter	
13	HDECE6797RCZZ	AH		D	Switch deco. panel	
14	LHLDW0006SCZZ	AB		C	Cable holder (NK−3N)	
15	XUBSD30P08000	AA		C	Screw (3×8)	
16	QCNW−7327RCZZ	AG		C	Key cable (display−key)	
17	QCNW−7420RCZZ	AE	N	C	Earth wire	
18	VVKFG1113RE11	BA		B	Display tube	
19	CPWBF7135RC01	BQ		E	Display PWB unit	
21	QCNW−7333RCZZ	AH		C	Key cable 2	
22	QCNW−7408RCZZ	AB		C	GND cable	
23	QCNW−7426RCZZ	AN	N	C	Display cable (Main PWB−display)	
24	LANGT7397RCZZ	AK		C	Angle for display PWB	
25	PSPAY6674RCZZ	AC		C	Spacer for display tube	
26	XBPSD30P08KS0	AA		C	Screw (3×8KS)	
27	LBNDJ0004UCZZ	AA		C	Band (for Ring core)	
28	Ki−ÕB6736RCZZ	CA	N	E	Printer unit (UCR910D)	
29	PSTM−6658RC01	AR		C	Stamp (YOUR RECIPT THANK YOU)	
30	XBPSD30P10KS0	AB		C	Screw (3×10KS)	
31	RFiLN6001RCZZ	AT		C	Noise filter	
32	PCUSG1220CCZZ	AB		C	Printer cushion	
33	QCNW−7405RCZZ	AE		C	Earth wire 6	
34	QCNW−7404RCZZ	AD		C	Earth wire 5	
36	GDAi−6664RCZZ	AH	N	D	Stand for roll paper	[U.S.A]
	GDAi−6662RCZZ	AH		D	Stand for roll paper	[Canada]
38	GFTAS6748RCZZ	AD		D	Loader lid	[U.S.A]
	GFTAS6741RCZZ	AD		D	Loader lid	[Canada]
39	HDECE6798RCZZ	AE		D	Deco.panel	
40	QCNW−7331RCZZ	AN		C	SIO connector	
41	RCÕRF5003SCZZ	AK		C	Core	
43	CKGi−7107RC04	AQ		B	Printer cover key unit	
44	QCNW−7403RCZZ	AE		C	Earth wire 4	
45	XBPBZ40P06K00	AA		C	Screw (4×6K)	
46	GFTAC6746RCZZ	AF		D	IC card lid	[U.S.A]
	GFTAC6742RCZZ	AG		D	IC card lid	[Canada]
47	GCABA7071RCZZ	BA	N	D	Bottom cabinet	[U.S.A]
	GCABA7075RCZZ	BC	N	D	Bottom cabinet	[Canada]
48	GiTAU6741RCZZ	AU		D	Base plate	
49	GFTAF6747RCZZ	AC		D	Front lid	[U.S.A]
	GFTAF6740RCZZ	AE		D	Flont lid	[Canada]
50	XUBSD30P06000	AA		C	Screw (3×6)	
51	LANGT7369RCZZ	AH		C	Connector angle	
52	QCNW−7360RCZZ	AB		C	Earth wire 3	
53	CPWBF7134RC03	CD	N	E	Main PWB unit	[U.S.A.]
	CPWBF7134RC05	CD	N	E	Main PWB unit	[Canada]
54	XBPSD40P14KS0	AA		C	Screw (4×14KS)	
55	QCNW−7342RCZZ	AC		C	GND wire	
57	PRDAF6644RCZZ	AR		C	Heat sink	
58	TLABG2744SCZZ	AA		D	Noise label	[Canada]
59	XNESD30−24000	AA		C	Nut (N3 ZMC)	
60	XBPSD40P08KS0	AA		C	Screw (4×8KS)	
⚠ 62	QACCD8411QCZZ	AN		B	AC cord (6A Bush 2.5M)	
64	QTANP0004HCZZ	AB		C	Lug terminal (4φ)	
65	HPNLC6779RCZZ	AH		D	AC cord panel	[U.S.A]
	HPNLC6773RCZZ	AE		D	AC cord panel	[Canada]
66	QCNW−7117RCZZ	AE		C	AC cable	
67	QTANP1094CCZZ	AA		C	Terminal	
68	PSHEP2789RCZZ	AC	N	C	Guide sheet	
70	GiTAU6742RCZZ	AE		D	Main earth plate	
72	XBPSD30P06KS0	AA		C	Screw (3×6KS)	
⚠ 78	RTRNP6825RCZZ	AY	N	B	Power transformer	
80	XBPSD40P06KS0	AA		C	Screw (4×6KS)	
81	LKGiM6784RCZZ	AD		B	Printer cover key (1PC)	
82	TCAUS6668RCZZ	AA		D	Caution label	
85	XUPSD20P04000	AA		C	Screw (2×4)	
86	XWHSD20−04060	AA		C	Washer (M2)	
87	QCNW−7402RCZZ	AE		C	Earth wire 3	

1 Exteriors

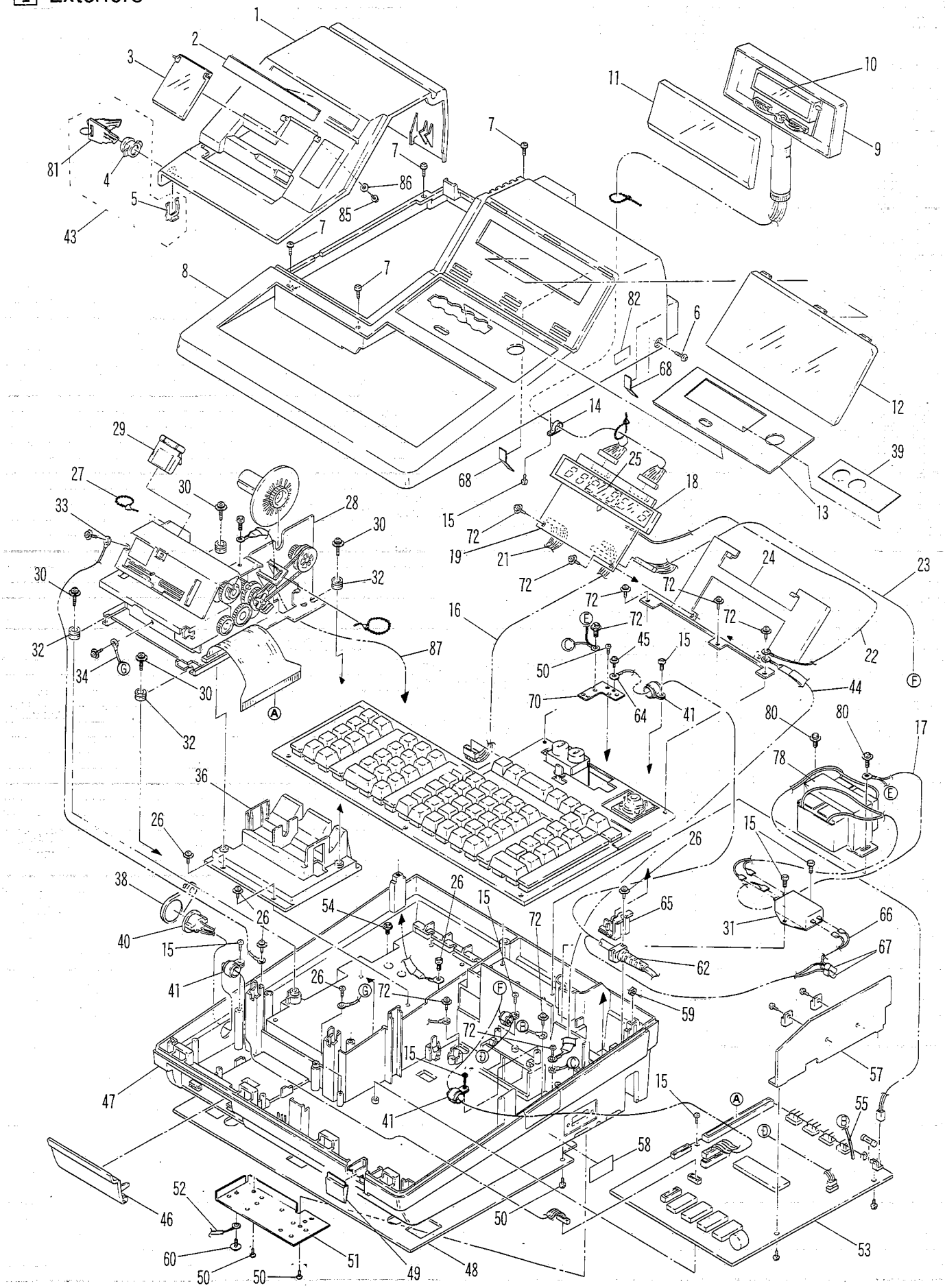
1
2
3
4
5
6
7
8
9
10
11
12
13
14
15
16
17
18
19
21
22
23
24
25
26
27
28
29
30
31
32
33
34
36
38
39
40
41
43
44
45
46
47
48
49
50
51
52
53
54
55
57
58
59
60
62
64
65
66
67
68
70
72
78
80
81
82
85
86
87

2 Keyboard unit

NO.	PARTS CODE	PRICE RANK	NEW MARK	PART RANK	DESCRIPTION
1	0EMKT80020001	AC	N	C	Key cap(1×1) (TKT8002−00−001)
2	0EMKT80220001	AE	N	C	Key cap(1×2) (TKT8022−00−001)
3	0EMWK45531110	AC	N	C	Spring(1×1) (TWK4553−11−010)
4	0EMWK45531210	AC	N	C	Spring(1×2) (TWK4553−12−010)
5	LKGiM7097RCZZ	AK		B	Clerk key(A)
	LKGiM7098RCZZ	AK		B	Clerk key(B)
6	XBSSD30P10000	AA		C	Screw (3×10)
7	LANGT7399RCZZ	AL	N	C	Angle for switch
8	XBBSC30P10000	AA		C	Screw (3×10)
9	XBPSD26P04K00	AA		C	Screw (2.6×4K)
10	LKGiW7256RCZZ	AP		B	Mode switch (Body)
11	JKNBZ6842RCZZ	AC		C	Knob for slide SW
12	QSW−S6850RCZZ	AF		B	Slide switch
13	0EMWK46466610	AE	N	C	Key top(1×2) (TWK4646−66−010)
14	0EMWK46466510	AC	N	C	Key top(1×1) (TWK4646−65−010)
15	LKGiM7110RCZZ	AG		B	Mode switch key (MA)
	LKGiM7111RCZZ	AG		B	Mode switch key (OP)
	LKGiM7129RCZZ	AE		B	Mode switch key (SM)
16	0EMWK45001510	AE	N	C	Dummy cover(1×5) (TWK4500−15−010)
18	0EMWK45001410	AD	N	C	Dummy cover(1×1) (TWK4500−14−010)
19	0EMWK46460210	BA	N	D	Housing (TWK4646−02−010)
21	0EMWK46466110	AR	N	C	Key top ass'y (TWK4646−61−010)
22	0EMWK46466310	BH	N	E	Key PWB ass'y (TWK4646−63−010)
23	0EMKE31133061	AA	N	C	Screw (M3×6)
24	0EMWK46460510	AX	N	C	Plate (TWK4646−05−010)
25	XUPSD23P08000	AA	N	C	Screw (2.3×8)
28	XBPSD30P06K00	AA		C	Screw (3×6K)
29	LKGiW7095RCZZ	AY		B	Clerk switch (Body)
30	QCNW−7434RCZZ	AC		C	Harness (2p)
31	0EMWK46460010	BA	N	C	Spacer (TWK4646−60−010)
101	0EMWK46460810	AR	N	D	Key label ass'y (TWK4646−08−010)
501	DUNTK9003RCZZ	BP	N	E	Key board

3 Packing material & Accessories

NO.	PARTS CODE	PRICE RANK	NEW MARK	PART RANK	DESCRIPTION
1	SPAKA7799RCZZ	AP		D	Packing cushion(Left)
2	SPAKA7800RCZZ	AP		D	Packing cushion(Right)
3	SPAKC7825RCZZ	AS	N	D	Packing case [U.S.A]
	SPAKC7830RCZZ	AS	N	D	Packing case [Canada]
4	LKGiM7110RCZZ	AG		B	Mode switch key (MA)
	LKGiM7111RCZZ	AG		B	Mode switch key (OP)
	LKGiM7129RCZZ	AE		B	Mode switch key (SM)
5	LKGiM6784RCZZ	AD		B	Printer cover key (1PC)
6	0AGLKMDC60A01	AH		B	Lock key (1PC)
7	SSAKH3012CCZZ	AA		D	Vinyl bag (80×120mm)
8	UiNK−1001CCZZ	AK		S	Ink (5cc)
9	TiNSE7156RCZZ	AP	N	D	Instruction book [U.S.A]
	TiNSK7162RCZZ	AX	N	D	Instruction book [Canada]
10	GCÖVD6959RCZZ	AP		D	Dust cover
11	SSAKH3015CCZZ	AA		D	Vinyl bag (240×360mm)
12	TCADH6653RCZZ	AB		D	Caution card [U.S.A]
	TCADH6654RCZZ	AB		D	Caution card [Canada]
13	SSAKA2012KCZZ	AF		D	Vinyl bag (600×540×510)
14	SSAKH4231CCZZ	AA		D	Vinyl bag (140×500mm)
101	UBNDA1008CCZZ	AA		C	AC cord band (120mm)

2 Keyboard unit

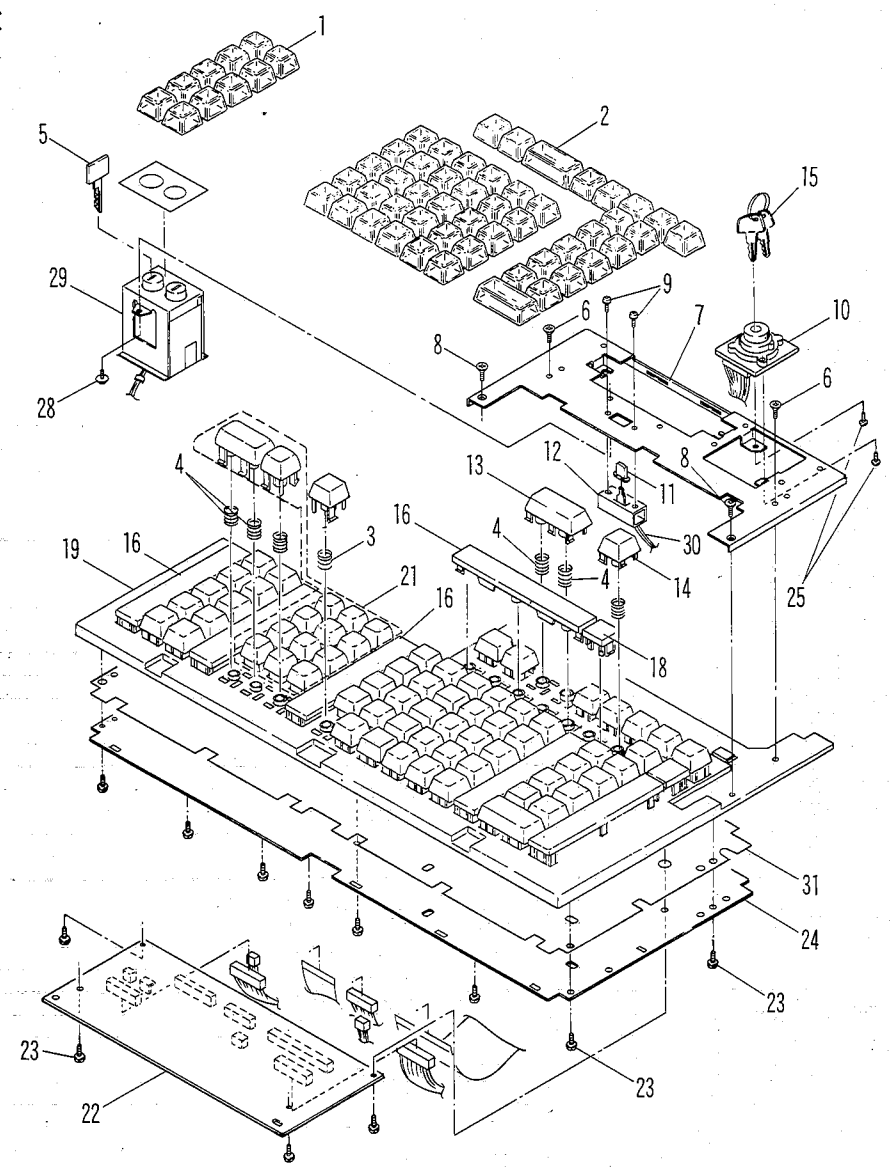

3 Packing material & Accessories

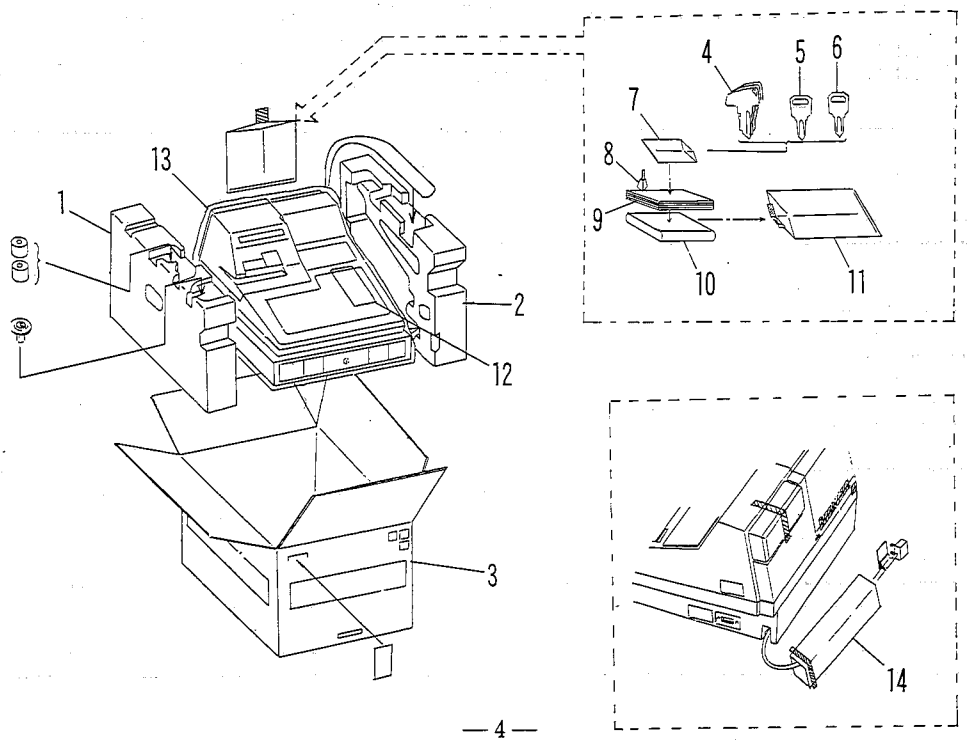

4 Drawer box unit(SP460 type)

NO.	PARTS CODE	PRICE RANK	NEW MARK	PART RANK	DESCRIPTION
1	0AGXBD20038C1	AA		C	Screw (3×8)
2	0AGXWD8003050	AA		C	Washer (3mm)
3	0AGLDW200MKSS	AD		C	Holder
4	0AGQCW701MKSS	AK		B	Cable for plunger (2P)
5	0AGGCM201S460	BF		D	Drawer cabinet
6	0AGNRP22B1L00	AE		C	Roller
7	0AGXBD80140 8W	AA		C	Screw (4×8)
8	0AGRAL201MKSS	AD		C	Bell
9	0AGLCS202MKSS	AH		C	Unit chassis
10	0AGXBD806406N	AA		C	Screw (4×6)
11	0AGMLF201MKSS	AB		C	Bell hammer
12	0AGMST809MKSB	AB		C	Bell spring
13	0AGGLG8022017	AB		C	Stopper rubber (Rear)(K2017)
14	0AGXBD803315S	AA		C	Screw (3×15)
15	0AGMST805460A	AD		C	Push out spring
16	0AGRLU200MKSS	AR		B	Plunger (24V)
17	0AGMKS212MKSS	AK		C	Lock angle
18	0AGXBD201306X	AA		C	Screw with washer (3×6)
19	0AGMST800MKSB	AB		C	Lock spring (For lock cam)
20	0AGLXZ800M4SP	AA		C	Nut (4mm)
21	0AGXRD8014060	AA		C	E type ring (4mm)
22	0AGMLF220MKSS	AB		C	Lever
23	0AGXBD804306B	AA		C	Screw (3×6)
24	0AGLBC615MKSS	AF		C	Bill pressure bracket (S) [U.S.A]
25	0AGLBC614MKSS	AK		C	Bill pressure bracket (L) [U.S.A]
26	0AGMST600MKSS	AB		C	Bill pressure spring [U.S.A]
27	0AGMLV600MKSS	AD		C	Bill pressure lever [U.S.A]
28	0AGPSR601MKSS	AF		C	Separator [U.S.A]
29	0AGGCP613MKSS	AY		D	Money case [U.S.A]
30	0AGLXZ801M6SP	AA		C	Spring nut (6mm)
31	0AGGDW473S460	AZ		D	Drawer case
32	0AGMSK801MKSS	AE		C	Lock key spring
33	0AGDC60A−010S	AP		B	Lock key (body)
34	0AGLKMDC60A01	AH		B	Lock key (1PC)
35	0AGGLG801MKSS	AB		C	Leg (26mm)
36	0AGXBD200415P	AA		C	Screw (4×15)
37	0AGLSG200MKSS	AB		C	Stoper rubber(Front)
38	0AGGiU180S460	AT		D	Bottom plate
39	0AGLBC610MKSS	AM		C	Bill pressure bracket (2A) [Canada]
40	0AGMST600MKSB	AB		C	Bill pressure spring (2A) [Canada]
41	0AGMLV607MKSS	AK		C	Bill pressure lever R (2A) [Canada]
42	0AGMLV606MKSS	AK		C	Bill pressure lever L (2A) [Canada]
43	0AGXBD805304N	AA		C	Screw (3×4) [Canada]
44	0AGLBC609MKSS	AH		C	Bill pressure bracket (4A) [Canada]
45	0AGLBC612MKSS	AD		C	Bill pressure angle [Canada]
46	0AGMST604MKSB	AB		C	Bill pressure spring (4A) [Canada]
47	0AGMLV602MKSS	AD		C	Bill pressure lever [Canada]
48	0AGGCP615MKSS	AX		C	Money case [Canada]
49	XBPSD40P14KS0	AA		C	Screw (4×14KS)
501	0AGCCP6136600	BC		D	Money case unit (6B/6C) [U.S.A]
502	0AGCCP6156500	BD		C	Money case unit (6B/5C) [Canada]
	(Unit)				
901	GBŌXD7014RCZZ	BT		E	Drawer box unit (except No.49) [U.S.A]
	GBŌXD7016RCZZ	BS		E	Drawer box unit (except No.49) [Canada]

4 Drawer box unit(SP460 type)

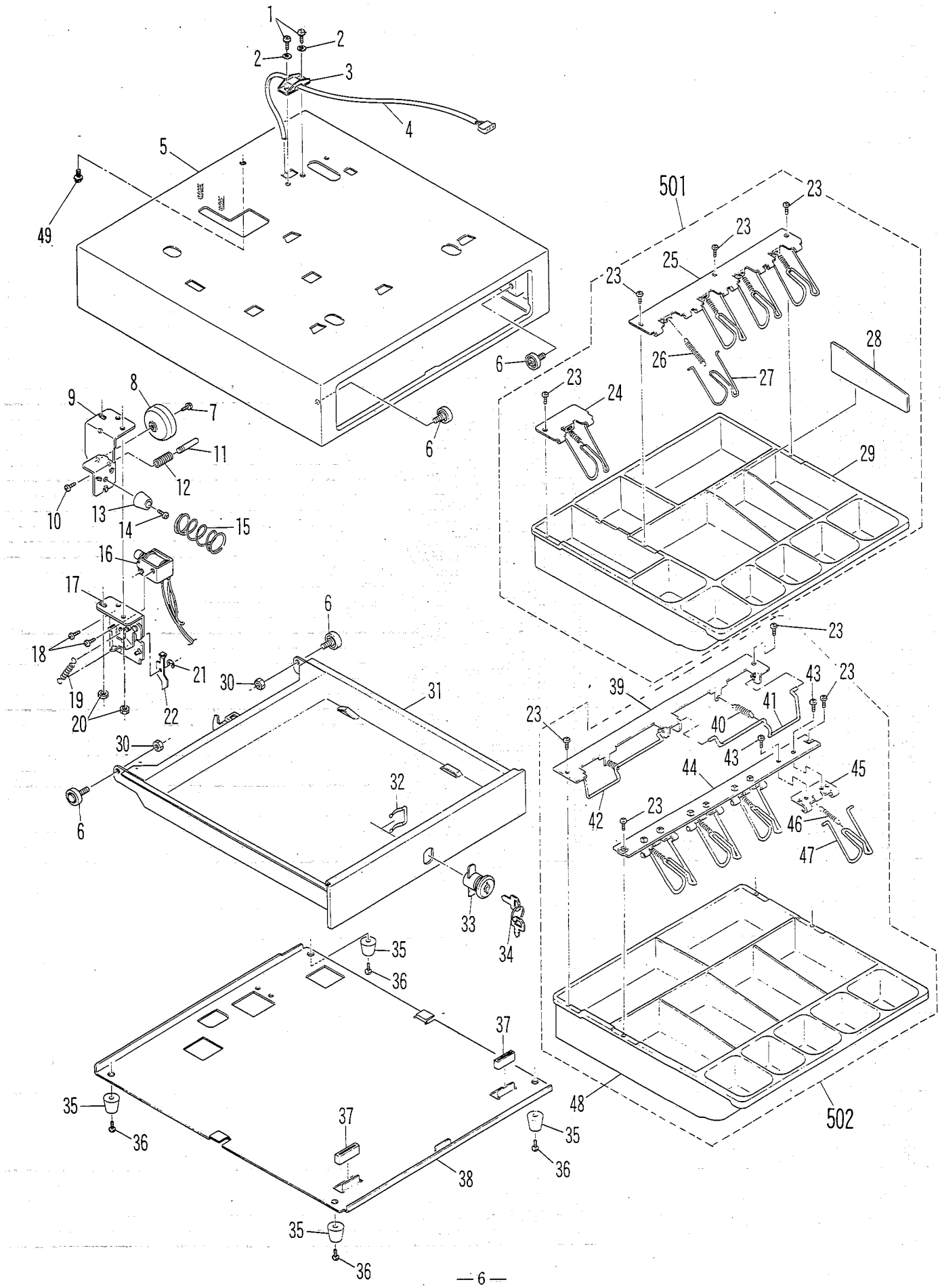

5 Main PWB unit

NO.	PARTS CODE	PRICE RANK	NEW MARK	PART RANK	DESCRIPTION
1	VHi27512RBH1A	BC	N	B	IC (27512RBH1A)
2	PRDAF6644RCZZ	AR		C	Heat sink
3	QCNCM0255FCZZ	AC		C	Connector (12pin)
4	QCNCM0275FCZZ	AA		B	Connector (3pin)
5	QCNCW1057ACZZ	AB		B	Connector (2pin)
6	QCNCM1060AC03	AB		B	Connector (3pin)
7	QCNCM1101CCZZ	AB		B	Connector (2pin)
8	QCNC-6786RC3J	AQ		C	Connector (30pin)
9	QCNCM6821RC0C	AC		B	Connector (3pin)
10	QCNCW6836RC3H	AL		C	Connector (38pin)
11	QCNCM6865RC0E	AB		C	Connector (5pin)
12	QCNCM6865RC1A	AD		C	Connector (11pin)
13	QCNCM6865RC1J	AC		C	Connector (10pin)
14	QCNCM6946RC5J	AH		C	Connector
15	QCNW-7342RCZZ	AC		C	GND wire
16	QCNW-7372RCZZ	AB		C	GND wire 1
17	QCNW-7373RCZZ	AC		C	GND wire 2
18	QCNW-7374RCZZ	AC		C	GND wire 3
19	QCNW-7375RCZZ	AC		C	GND wire 4
20	QCNW-7421RCZZ	AD	N	C	GND wire
21	QCNW-7422RCZZ	AE	N	C	GND wire
22	QCNW-7423RCZZ	AD	N	C	GND wire
23	QCNW-7426RCZZ	AN	N	C	Display cable (Main PWB-display)
24	QCNW-7432RCZZ	AF		C	GND earth wire
⚠ 25	QFS-B0322QCZZ	AC		A	Fuse
26	QFSHA1002CCZZ	AB		C	Holder,fuse (SN-3E)
27	QSOCZ2042SC32	AE		C	IC socket (32pin)
28	QSOCZ6428ACZZ	AE		C	IC socket (28pin)
29	RALMB6640RCZZ	AF		B	Buzzer (SMX06)
30	RC-EZB478RC1W	AK		C	Capacitor (45WV 4700μF)
31	RC-KZ1054CCN2	AB		C	Capacitor (0.1μF)
32	RC-KZ1054CCZZ	AB		C	Capacitor (0.1μF)
33	RC-Z1N104RCZZ	AA		C	Capacitor (12WV 0.10μF)
34	RCRSP6635RCZZ	AD		B	Crystal (4.91Hz)
35	RMPTE4101RCHZ	AD		B	Block resistor (100Ω×4)
36	RMPTC4103QCKB	AC		B	Block resistor (10KΩ×4 1/8W ±10%)
37	RMPTC5103QCKB	AC		B	Block resistor (10KΩ×5 1/8W ±10%)
38	RMPTE6101RCHZ	AD		B	Block resistor (100Ω×6)
39	RMPTC8103QCKB	AD		B	Block resistor (10KΩ×8 1/8W ±10%)
40	RTRNH6826RCZA	AN		B	Converter transformer
41	RVR-M5310QCN3	AG		B	Variable resistor (5KΩ)
42	UBATN6648RCZZ	AS		B	Battery
43	VCCCPU1HH200J	AB		C	Capacitor (50WV 20pF)
44	VCEAGA1CW106M	AA		C	Capacitor (16WV 10μF)
45	VCEAGA1HW105M	AA		C	Capacitor (50WV 1.0μF)
46	VCEAGA1HW227M	AC		C	Capacitor (50WV 220μF)
47	VCEAGA1HW476M	AB		C	Capacitor (50WV 47μF)
48	VCEAGA2AW226M	AB		C	Capacitor (100WV 22μF)
49	VCEAGU1CW228M	AE		C	Capacitor (16WV 2200μF)
50	VCKYPA1HB152K	AA		C	Capacitor (50WV 1500PF)
51	VCKYPU1HB101K	AA		C	Capacitor (50WV 100pF)
52	VCKYPU1HB102K	AA		C	Capacitor (50WV 1000pF)
53	VCKYPU1HB561K	AA		C	Capacitor (50WV 560PF)
54	VCKYPU2HB101K	AA		C	Capacitor (500WV 100PF)
55	VCQYNA1HM223K	AA		C	Capacitor (50WV 0.022μF)
56	VCQYNA2AM103K	AA		C	Capacitor (100WV 0.010μF)
57	VHDDSS131HV-1	AA		B	Diode (DSS131HV)
58	VHDDSS133HV-1	AA		B	Diode (DSS133HV)
59	VHDEK04////-1	AD		B	Diode (EK04)
60	VHDRS202L//-1	AD		B	Diode (RS202L)
61	VHD1SS82///-1	AB		B	Diode (1SS82)
62	VHERD10EN3/-1	AB		B	Zener diode (RD10EN3)
63	VHERD24FB3/-1	AC		B	Zener diode (RD24FB3)
64	VHERD39EB3/-1	AC		B	Zener diode (RD39EB3)
65	VHERD4.3EL2-1	AB		B	Zener diode (RD4.3EL2)
66	VHERD6.2EB1-1	AB		B	Zener diode (RD6.2EB1)
67	VHERD6.8E//-1	AB		B	Zener diode (RD6.8E)
68	VHH5KD5////-1	AB		B	Thermistor (5KD5)
69	VHiBA12001/-1	AE		B	IC (BA12001)
70	VHiBA12003/-1	AF		B	IC (BA12003)
71	VHiEHM62L816/	AX		B	IC (EHM62L816)
72	VHiHD63A03/-1	BB		B	IC (HD63A03)
73	VHiiR9393//-1	AE		B	IC (IR9393)
74	VHiLZ93M19/-1	AQ		B	IC (LZ93M19)
75	VHiMC74HC00-1	AE		B	IC (MC74HC00)
76	VHiMC74HC04-1	AE		B	IC (MC74HC04)
77	VHiM54567P/-1	AK		B	IC (M54567P)
78	VRD-RC2EY000J	AA		C	Resistor (1/4W ±5%)
79	VRD-RC2EY101J	AA		C	Resistor (1/4W 100Ω ±5%)
80	VRD-RC2EY102J	AA		C	Resistor (1/4W 1.0KΩ ±5%)

5 Main PWB unit

NO.	PARTS CODE	PRICE RANK	NEW MARK	PART RANK	DESCRIPTION
81	VRD-RC2EY103J	AA		C	Resistor (1/4W 10KΩ ±5%)
82	VRD-RC2EY104J	AA		C	Resistor (1/4W 100KΩ ±5%)
83	VRD-RC2EY133J	AA		C	Resistor (1/4W 13KΩ ±5%)
84	VRD-RC2EY181J	AA		C	Resistor (1/4W 180Ω ±5%)
85	VRD-RC2EY220J	AA		C	Resistor (1/4W 22Ω ±5%)
86	VRD-RC2EY222J	AA		C	Resistor (1/4W 2.2KΩ ±5%)
87	VRD-RC2EY272J	AA		C	Resistor (1/4W 2.7KΩ ±5%)
88	VRD-RC2EY273J	AA		C	Resistor (1/4W 27KΩ ±5%)
89	VRD-RC2EY331J	AA		C	Resistor (1/4W 330Ω ±5%)
90	VRD-RC2EY332J	AA		C	Resistor (1/4W 3.3KΩ ±5%)
91	VRD-RC2EY391J	AA		C	Resistor (1/4W 390Ω ±5%)
92	VRD-RC2EY392J	AA		C	Resistor (1/4W 3.9KΩ ±5%)
93	VRD-RC2EY471J	AA		C	Resistor (1/4W 470Ω ±5%)
94	VRD-RC2EY472J	AA		C	Resistor (1/4W 4.7KΩ ±5%)
95	VRD-RC2EY562G	AA		C	Resistor (1/4W 5.6KΩ ±2%)
96	VRD-RC2EY562J	AA		C	Resistor (1/4W 5.6KΩ ±5%)
97	VRD-RC2EY563J	AA		C	Resistor (1/4W 56KΩ ±5%)
98	VRD-RC2EY622G	AA		C	Resistor (1/4W 6.2KΩ ±2%)
99	VRD-RC2EY681J	AA		C	Resistor (1/4W 680Ω ±5%)
100	VRD-RC2EY752G	AA		C	Resistor (1/4W 7.5KΩ ±2%)
101	VRS-RE3AA681J	AA		C	Resistor (1W 680Ω ±5%)
102	VSJA101-///-1	AB		B	Transistor (JA101)
103	VSJC501-///-1	AB		B	Transistor (JC501)
104	VS2SB881-//-1	AH		B	Transistor (2SB881)
105	VS2SC4153-/-1	AG		B	Transistor (2SC4153)
106	VS2SD1769-/-1	AE		B	Transistor (2SD1195)
107	VS2SD667-//-1	AD		B	Transistor (2SD667)
108	XBPSD30P08KS0	AA		C	Screw (3×8KS)
109	XBPSD30P08K00	AA		C	Screw (3×8K)
	(Unit)				
901	CPWBF7134RC03	CD	N	E	Main PWB unit [U.S.A]
	CPWBF7134RC05		N	E	Main PWB unit [Canada]

6 Display PWB unit

NO.	PARTS CODE	PRICE RANK	NEW MARK	PART RANK	DESCRIPTION
1	LANGT7397RCZZ	AK		C	Angle for display PWB
2	PSPAY6674RCZZ	AC		C	Spacer for display tube
3	QCNCM2458RC0i	AD		C	Connector (9pin)
4	QCNCM2458RC1A	AD		C	Connector (11pin)
5	QCNCM6926RC1E	AE		C	Connector
6	QCNW-7327RCZZ	AG		C	Key cable (display-key)
7	QCNW-7333RCZZ	AH		C	Key cable 2 (display-key)
8	QCNW-7408RCZZ	AB		C	GND cable
9	RC-CZ1084CCZZ	AB		C	Capacitor (MFC H06D300)
10	RCRSP1018CCZZ	AL		B	Crystal (32768Hz)
11	RCRSZ6644RCZZ	AD		B	Crystal (CST4.19MGW)
12	RMPTCB104QCKB	AE		B	Block resistor (100KΩ×12 1/8W ±10%)
13	RMPTC9104QCKB	AD		B	Block resistor (100KΩ×9 1/8W ±10%)
14	VCCCPU1HH150J	AA		C	Capacitor (50WV 15PF)
15	VCCCPU1HH330J	AB		C	Capacitor (50WV 33pF)
16	VCEAGU1CW106M	AA		C	Capacitor (16WV 10μF)
17	VCKYPU1HB102K	AA		C	Capacitor (50WV 1000pF)
18	VCKYPU1HB101K	AA		C	Capacitor (50WV 100pF)
19	VCKYPU1HB102K	AA		C	Capacitor (50WV 1000pF)
20	VCSAVA1CE106M	AC		C	Capacitor (16WV 10μF)
21	VHDEK04////-1	AD		B	Diode (EK04)
22	VHiH4708A73FS	AW		B	IC (H4708A73FS)
23	VRD-RB2EY130J	AA		C	Resistor (1/4W 13Ω ±5%)
24	VRD-RC2EY104J	AA		C	Resistor (1/4W 100KΩ ±5%)
25	VRD-RC2EY221J	AA		C	Resistor (1/4W 220Ω ±5%)
26	VVKFG1113RE11	BA		B	Display tube
27	XBPSD30P06KS0	AA		C	Screw (3×6KS)
	(Unit)				
901	CPWBF7135RC01	BQ		E	Display PWB unit

7 Pop-up PWB unit

NO.	PARTS CODE	PRICE RANK	NEW MARK	PART RANK	DESCRIPTION
1	QCNCW6918RC09	AH		C	Connector with wires (9pin)
2	QCNCW6918RC11	AK		C	Connector with wires (11pin)
3	VVKFiP7B13/-1	AX		B	Display tube

7 Pop-up PWB unit

NO.	PARTS CODE	PRICE RANK	NEW MARK	PART RANK	DESCRIPTION
	(Unit)				
901	CPWBF7136RC01	BD		E	Pop-up PWB unit

8 Articles for consumption

NO.	PARTS CODE	PRICE RANK	NEW MARK	PART RANK	DESCRIPTION
1	UINK-1001CCZZ	AK		S	Ink (5cc)
2	DPAPR1006CSZZ	AR		S	Roll paper (5rolls/1pack)
3	NROLR6638RCZZ	AY		S	Ink roll (Purple)

■ Index

PARTS CODE	NO.	PRICE RANK	NEW MARK	PART RANK	
【C】					
CKGi−7107RC04	1- 43	AQ		B	
CPWBF7134RC03	1- 53	CD	N	E	
〃	5- 901	CD	N	E	
CPWBF7134RC05	1- 53	CD	N	E	
〃	5- 901	CD	N	E	
CPWBF7135RC01	1- 19	BQ		E	
〃	6- 901	BQ		E	
CPWBF7136RC01	1- 10	BD		E	
〃	7- 901	BD		E	
【D】					
DPAPR1006CSZZ	8- 2	AR		S	
DUNTK9003RCZZ	2- 501	BP	N	E	
【G】					
GBŌXD7014RCZZ	4- 901	BT		E	
GBŌXD7016RCZZ	4- 901	BS		E	
GCABA7071RCZZ	1- 47	BA	N	D	
GCABA7075RCZZ	1- 47	BC	N	D	
GCABB7054RCZZ	1- 8	AY		D	
GCABB7055RCZZ	1- 9	AL		D	
GCABB7061RCZZ	1- 8	AW		D	
GCŌVA6958RCZZ	1- 1	AU		D	
GCŌVA6978RCZZ	1- 1	AS	N	D	
GCŌVD6959RCZZ	3- 10	AP		D	
GDAi−6662RCZZ	1- 36	AH		D	
GDAi−6664RCZZ	1- 36	AH	N	D	
GFTAC6742RCZZ	1- 46	AG		D	
GFTAC6746RCZZ	1- 46	AF		D	
GFTAF6740RCZZ	1- 49	AE		D	
GFTAF6747RCZZ	1- 49	AC		D	
GFTAS6741RCZZ	1- 38	AD		D	
GFTAS6748RCZZ	1- 38	AD		D	
GiTAU6741RCZZ	1- 48	AU		D	
GiTAU6742RCZZ	1- 70	AE		D	
【H】					
HBDGD6863RCZZ	1- 2	AD	N	D	
HDECE6797RCZZ	1- 13	AH		D	
HDECE6798RCZZ	1- 39	AE		D	
HPNLC6773RCZZ	1- 65	AE		D	
HPNLC6779RCZZ	1- 65	AH		D	
【J】					
JKNBZ6842RCZZ	2- 11	AC		C	
【K】					
Ki−ŌB6736RCZZ	1- 28	CA	N	E	
【L】					
LANGT7369RCZZ	1- 51	AH		C	
LANGT7397RCZZ	1- 24	AK		C	
〃	6- 1	AK		C	
LANGT7399RCZZ	2- 7	AL	N	C	
LBNDJ0004UCZZ	1- 27	AA		C	
LHLDW0006SCZZ	1- 14	AB		C	
LKGiM6784RCZZ	1- 81	AD		B	
〃	3- 5	AD		B	
LKGiM7097RCZZ	2- 5	AK		B	
LKGiM7098RCZZ	2- 5	AK		B	
LKGiM7110RCZZ	2- 15	AG		B	
〃	3- 4	AG		B	
LKGiM7111RCZZ	2- 15	AG		B	
〃	3- 4	AG		B	
LKGiM7129RCZZ	2- 15	AE		B	
〃	3- 4	AE		B	
LKGiW7095RCZZ	2- 29	AY		B	
LKGiW7107RC01	1- 4	AK		B	
LKGiW7256RCZZ	2- 10	AP		B	
XUPSD23P08000	2- 25	AA	N	C	
【M】					
MSPRT6689RC02	1- 5	AC		C	
【N】					
NRŌLR6638RCZZ	8- 3	AY		S	
【P】					
PCUSG1220CCZZ	1- 32	AB		C	
PFiLW6714RCZZ	1- 3	AD		D	
PFiLW6870RCZZ	1- 11	AL	N	D	
PFiLW6871RCZZ	1- 12	AN	N	C	
PRDAF6644RCZZ	1- 57	AR		C	
〃	5- 2	AR		C	
PSHEP2789RCZZ	1- 68	AC	N	C	
PSPAY6674RCZZ	1- 25	AC		C	
〃	6- 2	AC		C	
PSTM−6658RC01	1- 29	AR		C	

PARTS CODE	NO.	PRICE RANK	NEW MARK	PART RANK	
【Q】					
QACCD8411QCZZ	1- 62	AN		B	
QCNC−6786RC3J	5- 8	AQ		C	
QCNCM0255FCZZ	5- 3	AC		C	
QCNCM0275FCZZ	5- 4	AA		B	
QCNCM1060AC03	5- 6	AB		B	
QCNCM1101CCZZ	5- 7	AB		B	
QCNCM2458RC0i	6- 3	AD		C	
QCNCM2458RC1A	6- 4	AD		C	
QCNCM6821RC0C	5- 9	AC		B	
QCNCM6865RC0E	5- 11	AB		C	
QCNCM6865RC1A	5- 12	AD		C	
QCNCM6865RC1J	5- 13	AC		C	
QCNCM6926RC1E	6- 5	AE		C	
QCNCM6946RC5J	5- 14	AH		C	
QCNCW1057ACZZ	5- 5	AB		B	
QCNCW6836RC3H	5- 10	AL		C	
QCNCW6918RC09	7- 1	AH		C	
QCNCW6918RC11	7- 2	AK		C	
QCNW−7117RCZZ	1- 66	AE		C	
QCNW−7327RCZZ	1- 16	AG		C	
〃	6- 6	AG		C	
QCNW−7331RCZZ	1- 40	AN		C	
QCNW−7333RCZZ	1- 21	AH		C	
〃	6- 7	AH		C	
QCNW−7342RCZZ	1- 55	AC		C	
〃	5- 15	AC		C	
QCNW−7360RCZZ	1- 52	AB		C	
QCNW−7372RCZZ	5- 16	AB		C	
QCNW−7373RCZZ	5- 17	AC		C	
QCNW−7374RCZZ	5- 18	AC		C	
QCNW−7375RCZZ	5- 19	AC		C	
QCNW−7402RCZZ	1- 87	AE		C	
QCNW−7403RCZZ	1- 44	AE		C	
QCNW−7404RCZZ	1- 34	AD		C	
QCNW−7405RCZZ	1- 33	AE		C	
QCNW−7408RCZZ	1- 22	AB		C	
〃	6- 8	AB		C	
QCNW−7420RCZZ	1- 17	AE	N	C	
QCNW−7421RCZZ	5- 20	AD	N	C	
QCNW−7422RCZZ	5- 21	AE	N	C	
QCNW−7423RCZZ	5- 22	AD	N	C	
QCNW−7426RCZZ	1- 23	AN	N	C	
〃	5- 23	AN	N	C	
QCNW−7432RCZZ	5- 24	AF		C	
QCNW−7434RCZZ	2- 30	AC		C	
QFS−B0322QCZZ	5- 25	AC		A	
QFSHA1002CCZZ	5- 26	AB		C	
QSŌCZ2042SC32	5- 27	AE		C	
QSŌCZ6428ACZZ	5- 28	AE		C	
QSW−S6850RCZZ	2- 12	AF		B	
QTANP0004HCZZ	1- 64	AB		C	
QTANP1094CCZZ	1- 67	AA		C	
【R】					
RALMB6640RCZZ	5- 29	AF		B	
RC−CZ1084CCZZ	6- 9	AB		C	
RC−EZB478RC1W	5- 30	AK		C	
RC−KZ1054CCN2	5- 31	AB		C	
RC−KZ1054CCZZ	5- 32	AB		C	
RC−Z1N104RCZZ	5- 33	AA		C	
RCŌRF5003SCZZ	1- 41	AK		C	
RCRSP1018CCZZ	6- 10	AL		B	
RCRSP6635RCZZ	5- 34	AD		B	
RCRSZ6644RCZZ	6- 11	AD		B	
RFiLN6001RCZZ	1- 31	AT		C	
RMPTCB104QCKB	6- 12	AE		B	
RMPTC4103QCKB	5- 36	AC		B	
RMPTC5103QCKB	5- 37	AC		B	
RMPTC8103QCKB	5- 39	AD		B	
RMPTC9104QCKB	6- 13	AD		B	
RMPTE4101RCHZ	5- 35	AD		B	
RMPTE6101RCHZ	5- 38	AD		B	
RTRNH6826RCZA	5- 40	AN		B	
RTRNP6825RCZZ	1- 78	AY	N	B	
RVR−M5310QCN3	5- 41	AG		B	
【S】					
SPAKA7799RCZZ	3- 1	AP		D	
SPAKA7800RCZZ	3- 2	AP		D	
SPAKC7825RCZZ	3- 3	AS	N	D	
SPAKC7830RCZZ	3- 3	AS	N	D	

PARTS CODE	NO.	PRICE RANK	NEW MARK	PART RANK
SSAKA2012KCZZ	3- 13	AF		D
SSAKH3012CCZZ	3- 7	AA		D
SSAKH3015CCZZ	3- 11	AA		D
SSAKH4231CCZZ	3- 14	AA		D
【T】				
TCADH6653RCZZ	3- 12	AB		D
TCADH6654RCZZ	3- 12	AB		D
TCAUS6668RCZZ	1- 82	AA		D
TiNSE7156RCZZ	3- 9	AP	N	D
TiNSK7162RCZZ	3- 9	AX	N	D
TLABG2744SCZZ	1- 58	AA		D
【U】				
UBATN6648RCZZ	5- 42	AS		B
UBNDA1008CCZZ	3- 101	AA		C
UiNK-1001CCZZ	3- 8	AK		S
〃	8- 1	AK		S
【V】				
VCCCPU1HH150J	6- 14	AA		C
VCCCPU1HH200J	5- 43	AB		C
VCCCPU1HH330J	6- 15	AB		C
VCEAGA1CW106M	5- 44	AA		C
VCEAGA1HW105M	5- 45	AA		C
VCEAGA1HW227M	5- 46	AC		C
VCEAGA1HW476M	5- 47	AB		C
VCEAGA2AW226M	5- 48	AB		C
VCEAGU1CW106M	6- 16	AA		C
VCEAGU1CW228M	5- 49	AE		C
VCKYPA1HB152K	5- 50	AA		C
VCKYPU1HB101K	5- 51	AA		C
〃	6- 18	AA		C
VCKYPU1HB102K	5- 52	AA		C
〃	6- 17	AA		C
〃	6- 19	AA		C
VCKYPU1HB561K	5- 53	AA		C
VCKYPU2HB101K	5- 54	AA		C
VCQYNA1HM223K	5- 55	AA		C
VCQYNA2AM103K	5- 56	AA		C
VCSAVA1CE106M	6- 20	AC		C
VHDDSS131HV-1	5- 57	AA		B
VHDDSS133HV-1	5- 58	AA		B
VHDEK04////-1	5- 59	AD		B
〃	6- 21	AD		B
VHDRS202L//-1	5- 60	AD		B
VHD1SS82///-1	5- 61	AB		B
VHERD10EN3/-1	5- 62	AB		B
VHERD24FB3/-1	5- 63	AC		B
VHERD39EB3/-1	5- 64	AC		B
VHERD4.3EL2-1	5- 65	AB		B
VHERD6.2EB1-1	5- 66	AB		B
VHERD6.8E//-1	5- 67	AB		B
VHH5KD5////-1	5- 68	AB		B
VHiBA12001/-1	5- 69	AE		B
VHiBA12003/-1	5- 70	AF		B
VHiEHM62L816/	5- 71	AX		B
VHiHD63A03/-1	5- 72	BB		B
VHiH4708A73FS	6- 22	AW		B
VHiiR9393//-1	5- 73	AE		B
VHiLZ93M19/-1	5- 74	AQ		B
VHiMC74HC00-1	5- 75	AE		B
VHiMC74HC04-1	5- 76	AE		B
VHiM54567P/-1	5- 77	AK		B
VHi27512RBH1A	5- 1	BC	N	B
VRD-RB2EY130J	6- 23	AA		C
VRD-RC2EY000J	5- 78	AA		C
VRD-RC2EY101J	5- 79	AA		C
VRD-RC2EY102J	5- 80	AA		C
VRD-RC2EY103J	5- 81	AA		C
VRD-RC2EY104J	5- 82	AA		C
〃	6- 24	AA		C
VRD-RC2EY133J	5- 83	AA		C
VRD-RC2EY181J	5- 84	AA		C
VRD-RC2EY220J	5- 85	AA		C
VRD-RC2EY221J	6- 25	AA		C
VRD-RC2EY222J	5- 86	AA		C
VRD-RC2EY272J	5- 87	AA		C
VRD-RC2EY273J	5- 88	AA		C
VRD-RC2EY331J	5- 89	AA		C
VRD-RC2EY332J	5- 90	AA		C
VRD-RC2EY391J	5- 91	AA		C
VRD-RC2EY392J	5- 92	AA		C

PARTS CODE	NO.	PRICE RANK	NEW MARK	PART RANK
VRD-RC2EY471J	5- 93	AA		C
VRD-RC2EY472J	5- 94	AA		C
VRD-RC2EY562G	5- 95	AA		C
VRD-RC2EY562J	5- 96	AA		C
VRD-RC2EY563J	5- 97	AA		C
VRD-RC2EY622G	5- 98	AA		C
VRD-RC2EY681J	5- 99	AA		C
VRD-RC2EY752G	5- 100	AA		C
VRS-RE3AA681J	5- 101	AA		C
VSJA101-///-1	5- 102	AB		B
VSJC501-///-1	5- 103	AB		B
VS2SB881-//-1	5- 104	AH		B
VS2SC4153-/-1	5- 105	AG		B
VS2SD1769-/-1	5- 106	AE		B
VS2SD667-//-1	5- 107	AD		B
VVKFG1113RE11	1- 18	BA		B
〃	6- 26	BA		B
VVKFiP7B13/-1	7- 3	AX		B
【X】				
XBBSC30P06000	1- 7	AA		C
XBBSC30P10000	1- 6	AA		C
〃	2- 8	AA		C
XBPBZ40P06K00	1- 45	AA		C
XBPSD26P04K00	2- 9	AA		C
XBPSD30P06KS0	1- 72	AA		C
〃	6- 27	AA		C
XBPSD30P06K00	2- 28	AA		C
XBPSD30P08KS0	1- 26	AA		C
〃	5- 108	AA		C
XBPSD30P08K00	5- 109	AA		C
XBPSD30P10KS0	1- 30	AB		C
XBPSD40P06KS0	1- 80	AA		C
XBPSD40P08KS0	1- 60	AA		C
XBPSD40P14KS0	1- 54	AA		C
〃	4- 49	AA		C
XBSSD30P10000	2- 6	AA		C
XNESD30-24000	1- 59	AA		C
XUBSD30P06000	1- 50	AA		C
XUBSD30P08000	1- 15	AA		C
XUPSD20P04000	1- 85	AA		C
XWHSD20-04060	1- 86	AA		C
【0】				
0AGCCP6136600	4- 501	BC		D
0AGCCP6156500	4- 502	BD		C
0AGDC60A-010S	4- 33	AP		B
0AGGCM201S460	4- 5	BF		D
0AGGCP613MKSS	4- 29	AY		D
0AGGCP615MKSS	4- 48	AX		C
0AGGDW473S460	4- 31	AZ		D
0AGGiU180S460	4- 38	AT		D
0AGGLG801MKSS	4- 35	AB		C
0AGGLG8022017	4- 13	AB		C
0AGLBC609MKSS	4- 44	AH		C
0AGLBC610MKSS	4- 39	AM		C
0AGLBC612MKSS	4- 45	AD		C
0AGLBC614MKSS	4- 25	AK		C
0AGLBC615MKSS	4- 24	AF		C
0AGLCS202MKSS	4- 9	AH		C
0AGLDW200MKSS	4- 3	AD		C
0AGLKMDC60A01	3- 6	AH		B
〃	4- 34	AH		B
0AGLSG200MKSS	4- 37	AB		C
0AGLXZ800M4SP	4- 20	AA		C
0AGLXZ801M6SP	4- 30	AA		C
0AGMKS212MKSS	4- 17	AK		C
0AGMLF201MKSS	4- 11	AB		C
0AGMLF220MKSS	4- 22	AB		C
0AGMLV600MKSS	4- 27	AD		C
0AGMLV602MKSS	4- 47	AD		C
0AGMLV606MKSS	4- 42	AK		C
0AGMLV607MKSS	4- 41	AK		C
0AGMSK801MKSS	4- 32	AE		C
0AGMST600MKSB	4- 40	AB		C
0AGMST600MKSS	4- 26	AB		C
0AGMST604MKSB	4- 46	AB		C
0AGMST800MKSB	4- 19	AB		C
0AGMST805460A	4- 15	AD		C
0AGMST809MKSB	4- 12	AB		C
0AGNRP22B1L00	4- 6	AE		C
0AGPSR601MKSS	4- 28	AF		C

PARTS CODE	NO.	PRICE RANK	NEW MARK	PART RANK	
0AGQCW701MKSS	4- 4	AK		B	
0AGRAL201MKSS	4- 8	AD		C	
0AGRLU200MKSS	4- 16	AR		B	
0AGXBD20038C1	4- 1	AA		C	
0AGXBD200415P	4- 36	AA		C	
0AGXBD201306X	4- 18	AA		C	
0AGXBD801408W	4- 7	AA		C	
0AGXBD803315S	4- 14	AA		C	
0AGXBD804306B	4- 23	AA		C	
0AGXBD805304N	4- 43	AA		C	
0AGXBD806406N	4- 10	AA		C	
0AGXRD8014060	4- 21	AA		C	
0AGXWD8003050	4- 2	AA		C	
0EMKE31133061	2- 23	AA	N	C	
0EMKT80020001	2- 1	AC	N	C	
0EMKT80220001	2- 2	AE	N	C	
0EMWK45001410	2- 18	AD	N	C	
0EMWK45001510	2- 16	AE	N	C	
0EMWK45531110	2- 3	AC	N	C	
0EMWK45531210	2- 4	AC	N	C	
0EMWK46460210	2- 19	BA	N	D	
0EMWK46460510	2- 24	AX	N	C	
0EMWK46460810	2- 101	AR	N	D	
0EMWK46466010	2- 31	BA	N	C	
0EMWK46466110	2- 21	AR	N	C	
0EMWK46466310	2- 22	BH	N	E	
0EMWK46466510	2- 14	AC	N	C	
0EMWK46466610	2- 13	AE	N	C	

PARTS CODE	NO.	PRICE RANK	NEW MARK	PART RANK	

SHARP

SHARP CORPORATION
Information Systems Group
Quality & Reliability Control Center
Yamatokoriyama, Nara 639-11, Japan
1990 August Printed in Japan Ⓢ